SMOG HOG® Electrostatic Precipitator Owner's Manual

SGN Series

ENGINEERING YOUR SUCCESS.

Introduction

These instructions must be thoroughly read and understood before installing and operating this product. Failure to operate this product in accordance with the instructions set forth in this manual can lead to unsafe operating conditions and may void warranty. For additional information, refer to this manual or contact the factory for recommendations. Please have the dryer serial number and model ready when contacting the factory.

Factory Contact Information

Phone 1-716-686-6400 or 1-800-343-4048
For pricing, availability, and purchase orders: smoghog@parker.com
For technical support and aftermarket: smoghog@parker.com
For product applications and technical sales: smoghog@parker.com

KNOW YOUR EQUIPMENT

READ THIS MANUAL FIRST.

Your SMOGHOG® SGN should provide many years of trouble-free service. This manual will help you understand the operation of your SGN unit. It will also help you understand how to maintain it in order to achieve top performance. For quick future reference, fill in the system information in the spaces below. Should you need assistance, call the Parker Customer Service number shown below. To expedite your service, have the following information available when contacting Parker.

PARKER ORDER #: _____

UNIT MODEL #: _____

UNIT SERIAL #: _____

HIGH VOLTAGE POWER PART NUMBER:_____

SYSTEM ACCESSORIES:

_____

_____

_____

INSTALLATION DATE: _____

TABLE OF CONTENTS

Page

SAFETY PRECAUTIONS....5

1. HOW THE SMOGHOG SGN SERIES WORKS....7

2. INSPECTION OF EQUIPMENT....7

3. INSTALLATION PLANNING....8
- 3.1 Unducted or Area Capture....8
- 3.2 Ducted or Source Capture....8
- 3.3 Specifications....8

4. INSTALLATION
- 4.1 Ceiling Mounting....11
- 4.2 Column or Wall Mounting....12
- 4.3 Bottom Supports....12
- 4.4 Drains....12
- 4.5 Electrical Connections....12
- 4.6 Power Pack....14
- 4.7 Air Diffuser....14

5. START UP AND OPERATION....14
- 5.1 Installing Components....14
- 5.2 Blower Rotation....15
- 5.3 Blower Current Measurement....15
- 5.4 Motor Variable Pitch Pulley Adjustment....16
- 5.5 Blower Belt Tension Adjustment....17
- 5.6 Power Pack Operation....17
- 5.7 Power Pack Enclosure Push Rod and Grounding Bar....17
- 5.8 Placing SGN Online....19

6. MAINTENANCE AND MANUAL CLEANING....19
- 6.1 Normal Maintenance....19
  - 6.1.1 Check Power Pack Enclosure Indicator Lights....19
  - 6.1.2 Check Component Appearance Weekly....19
  - 6.1.3 Manually Cleaning Components, Cabinet and Other....20
- 6.2 Manual Cleaning of SMOG HOG Components....20
  - 6.2.1 Type of Detergent....20
  - 6.2.2 Detergent Strength....20
  - 6.2.3 Water Temperature....20
  - 6.2.4 Agitation/Impingement....20
  - 6.2.5 Cleaning Cycle Duration....20
  - 6.2.6 Rinse Procedure....21
  - 6.2.7 Dry-Out Time....21

TABLE OF CONTENTS

Page

7. MANUAL CLEANING METHODS 21
   7.1 Soak Tank 21
   7.2 Portable Pressure Washer 21
   7.3 Automatic Parts Washer 21
   7.4 Other Cleaning Considerations 21

8. APPEARANCE OF COMPONENTS AFTER CLEANING 22
   8.1 Unicell 22
   8.2 Pre-filters/After-filters 22
   8.3 Cabinet 22

9. PART REPLACEMENT PROCEDURES AND ADJUSTMENTS 22
   9.1 Ionizer Wire Replacement 22
   9.2 Door Feed Through Insulators 23
   9.3 Indicator Light 23
   9.4 Blower Lubrication 23
   9.5 Component Access Door Gasket Replacement 24
   9.6 Power Pack Enclosure Push Rod Adjustment 25

10. TROUBLESHOOTING 26
   10.1 Troubleshooting Procedure 26
   10.2 High Voltage Probe Measurements 30
   10.3 Bench Test Procedure 31
   10.4 Troubleshooting Guide 33

11. ORDERING PARTS 35
   11.1 Replacement Parts 35
   11.2 Returning Parts 35
   11.3 Freight Cost 35

12. APPENDIX 36
   12.1 Wiring Diagrams 36/37
   12.2 Power Pack Enclosure Illustration 38
   12.3 Power Pack Enclosure Assembly Parts List 39

SAFETY PRECAUTIONS

We have provided many important safety messages in this manual on your SMOGHOG SGN. Always read and obey all safety messages.

This is the safety alert symbol.

This symbol alerts you to potential hazards that can kill or hurt you and others. All safety messages will follow the safety alert symbol and the word “DANGER” “WARNING” or “CAUTION”. These words mean:

DANGER — **Indicates a hazardous situation which, if not avoided, will result in death or serious injury.**

WARNING — **Indicates a potentially hazardous situation which, if not avoided, could result in death or serious injury.**

CAUTION — **Indicates a potentially hazardous situation which, if not avoided, may result in minor or moderate injury.**

CAUTION — **CAUTION used without the safety alert symbol indicates a potentially hazardous situation which, if not avoided, may result in property damage.**

IMPORTANT SAFETY INSTRUCTIONS

WARNING

To reduce the risk of fire, electric shock, or injury when using your air cleaner, follow these basic precautions:

- Wear protective clothing and safety glasses when handling collector components or servicing the unit.
- Use proper lifting and rigging equipment to install your electronic precipitator.
- The electrostatic precipitator should be properly grounded.
- Disconnect power before servicing.
- Replace all access panels before operating.
- Do not operate the unit with component door(s) open.
- Electrical connections should only be completed by qualified personnel and be in accordance with local and national codes and regulations.
- Do not collect emissions which are explosive
- Do not use in explosive atmospheres.
- Use non flammable cleaners.
- Keep flammable materials and vapors, such as gasoline, away from the unit.
- The unit should be inspected frequently and contaminants removed to prevent excessive accumulation which may result in flash-over or fire damage.
- Operate only in a safe and serviceable condition.
- Operating temperature to the air stream should not exceed 120° F.

COMBUSTIBLE DUST HAZARDS –
SMOG-HOG® and DUST-HOG® Pollution Control Systems

Pursuant to National Fire Protection Agency (NFPA) Standards, the owner/user is required to test their dust mixtures to evaluate and understand potential combustion or deflagration hazards that may exist. In addition, NFPA standards require the owner/user to perform and have record of a Dust Hazard Analysis (DHA) if there is potentially a combustible material involved within or exposed to the process.

The DHA serves as a systematic review of the process to:
1) Identify where fires and explosions can occur;
2) Identify the potential causes and consequences, and;
3) Determine if existing and proposed safeguards are sufficient.

It is the responsibility of the owner/user to evaluate, interpret and document any associated risk in their process including adherence and compliance to any and all applicable local, state and federal codes, standards, laws and regulations.

It is the sole responsibility of the equipment owner/user of record to coordinate and perform sample material collection and combustion/explosivity testing of any and all dust and material that will be extracted and filtered by the Air Pollution Control (APC) filtration equipment and to notify Parker of the results prior to any discussion involving equipment specification and solution recommendation. It is recommended to utilize a Certified Industrial Hygienist (CIH) or certified safety expert that is properly trained, licensed and approved and to use a licensed and approved dust testing facility for proper dust and material analysis, testing protocol and reporting procedures. A sample of testing facilities and list of Industrial Hygiene (CIH) and other occupational and environmental health and safety (OEHS) consultants can be located through AIHA (American Industrial Hygiene Association) website.

To minimize the risk of fire or explosion, user must ensure proper installation, operation and maintenance of Parker equipment. Since application, installation, operation and maintenance are beyond the control of Parker, Parker disclaims any liability or responsibility for damage from fires or explosions regardless of origin. Parker recommends that all APC dust collection equipment, installation and application conform to any and all applicable local, state and federal standards, codes, laws and regulations including the addition of appropriate fire or explosion protection systems including but not limited to venting, mitigation, suppression and isolation when and where required. Installation of Parker equipment should be by a licensed contractor that is also experienced in potential fire and explosion hazards and adheres to related local, state and federal codes, standards, laws and regulations. Parker is not an expert nor certified design consultant in relation to spark, fire or explosion mitigation including but not limited to detection, mitigation, suppression and isolation pf combustible dusts and materials. Therefore, Parker recommends that any industrial air filtration system recommendation, design or solution be reviewed, approved, stamped and signed by an industry expert consultant in air filtration systems, combustible dust/materials or certified safety expert such as a Certified Industrial Hygienist (CIH) or a Certified Professional Engineer (PE) who is a licensed and certified expert with industrial filtration system design and application including adherence and compliance to any and all applicable local, state and federal codes, standards, laws and regulations.

Pursuant to Parker's Offer of Sale (terms and conditions) and by accepting the purchased equipment, Buyer and owner/user agree to defend, indemnify, and hold harmless Parker, its successors, assignees, suppliers, shareholders, directors, officers, employees, agents, and affiliated companies from all losses, costs, damages, demands, claims, liabilities, fines, penalties or any other expenses (including attorneys' fees, court costs, and expert fees) (collectively "losses"), caused or contributed to in any way by Buyer or owner/user's failure to follow these instructions and/or failure to properly install, apply, operate, or maintain the equipment purchased from or supplied by Parker, or losses caused or contributed to in any way by Buyer's and owner/user's failure to provide accurate information, specifications or dust explosivity values.

1. HOW THE SMOGHOG SGN SERIES WORKS

The SMOG HOG is a self-contained air cleaning system which removes dry or oily airborne contaminants from industrial work areas. Operating on the principle of electrostatic precipitation, it pulls air past a mechanical prefilter, charges and collects airborne particulate, then exhausts clean air to the environment.

Prefilters serve the dual purpose of trapping large particulate and diffusing the airstream evenly into precipitator components at low, controlled velocity. Air passes through an ionizing section, where nearly all particulate is charged, then on to a collecting section where charged particles are repelled from similarly charged plates and drawn to ground plates. Agglomerated particles separated from collection plates during unit start-up are trapped on an afterfilter, allowing clean air to pass through the system blower at all times.

SGN units may be ducted directly to the contaminant source or unducted to remove particulate from the general environment. Units are generally suspended from the ceiling but may be cradle or skid mounted to suit the application. Units without blowers are supplied where air is moved through the units by others.

The SMOG HOG uniquely combines high airflow and high efficiency. Its compact “unicell” design helps minimize contaminant by-pass. All SGN units supplied with blowers have adjustable louvers to direct exhaust air as required.

Ionizing and collecting sections operate on high DC (direct current) voltage and low amperage, yielding a very low power consumption of 75 watts maximum per power supply. The high voltage creates a powerful field for trapping small to submicronic particles. At start-up, the unit’s power supply charges each unicell while the system blower begins to move air through the unit.

2. INSPECTION OF EQUIPMENT

Upon receipt of your SMOGHOG SGN, check carefully for possible shipping damage. (Any damage to carton, skid, etc., may be a warning to you that rough handling has caused internal damage.) Units supplied with accessories will arrive in multiple cartons. Check cartons versus bill of lading.

Notify your delivery carrier and enter a claim if any damage is found.

3. INSTALLATION PLANNING

3.1 UNDUCTED OR AREA CAPTURE

Consideration should be given to the placement of the precipitator to maximize its effectiveness. The number of units required to clean the air will depend on the layout of the room and the concentration of pollutants.

Because it is necessary to develop proper airflow patterns, the placement and number of precipitators should be as suggested by Parker or your local representative.

3.2 DUCTED OR SOURCE CAPTURE

When your SGN is used as a ducted source collector, the enclosure or pick-up hood design is important for adequate capture of contaminants. Drive pulleys and belts have been selected to provide proper airflow at the design static pressure specified. Pulleys and belts should not be replaced without first contacting PARKER Customer Service at 1-800-343-4048.

3.3 SPECIFICATIONS

SMOG HOG SGN Series are self-contained, two-stage, Penney-type, electrostatic precipitators complete with fully interlocked, energy limiting UL “recognized component” power packs, mechanical prefilters, unicell construction (combination ionizer and collection cell), afterfilters, indicator lights and interlock switches. All high voltage wiring is external to the component enclosure.

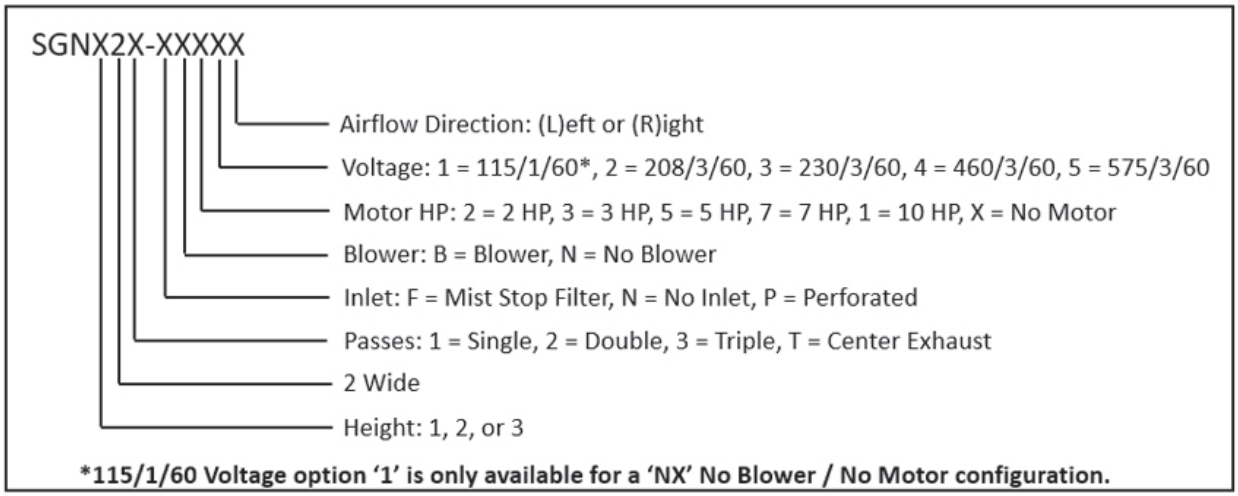

Figure 1
SGN SERIES NOMENCLATURE

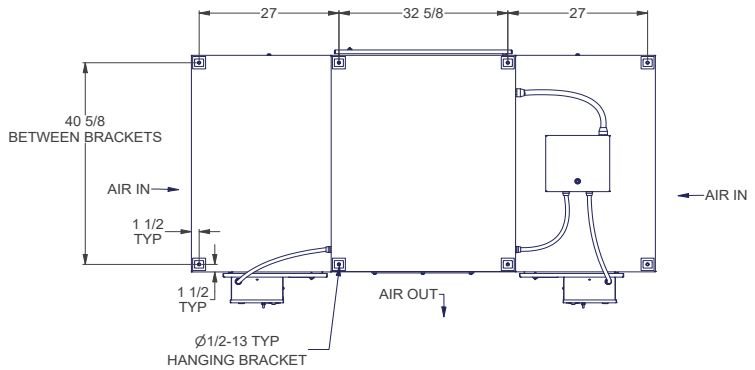

MODEL: SGN12T

ALLOW 36" CLEARANCE FOR DOOR ACCESS
FRONT AND REAR

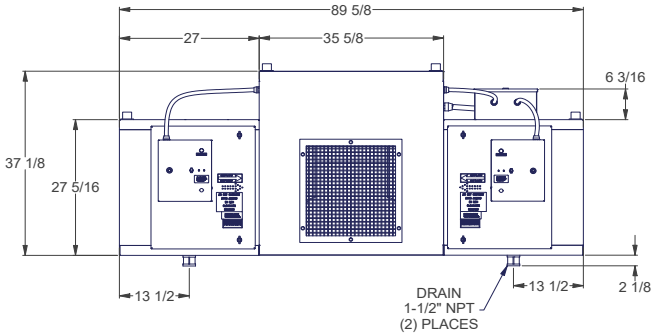

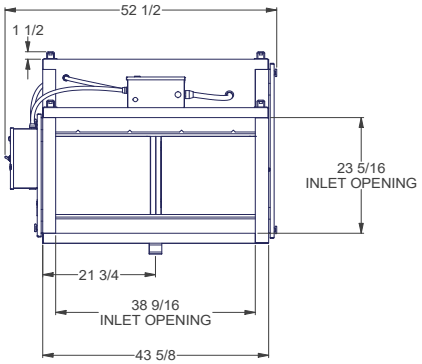

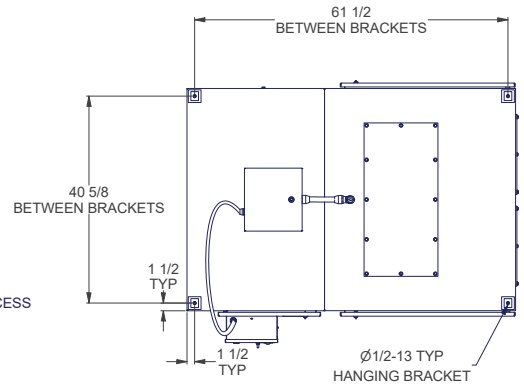

MODEL: SGN121

ALLOW 36" CLEARANCE FOR DOOR ACCESS

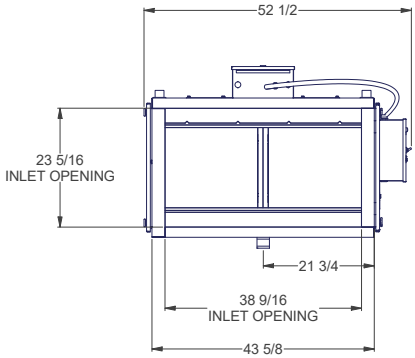

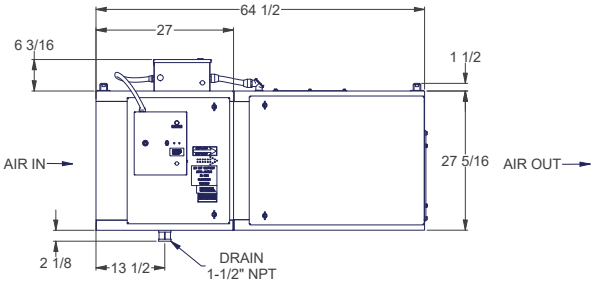

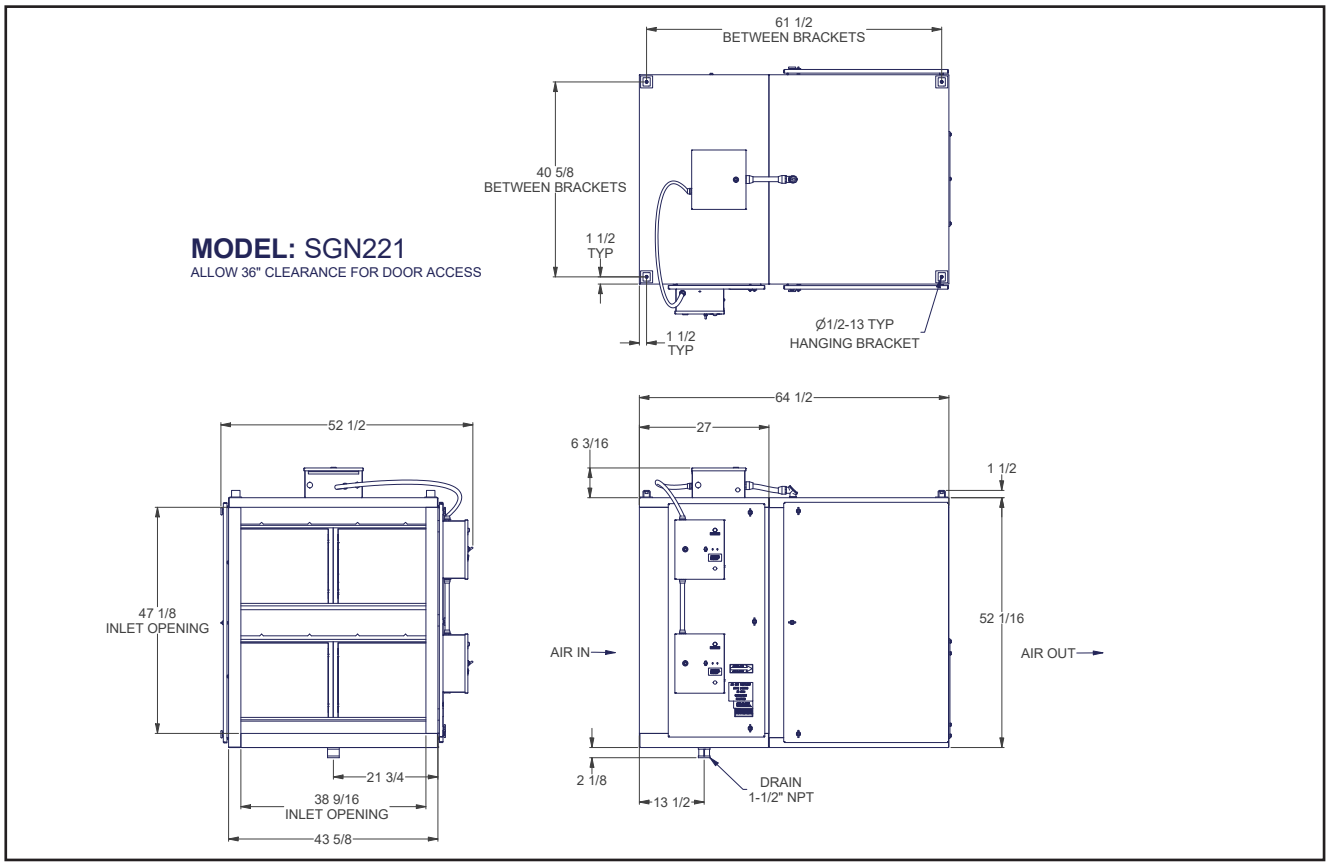

Figure 2 Installation Dimensions (in./cm.)

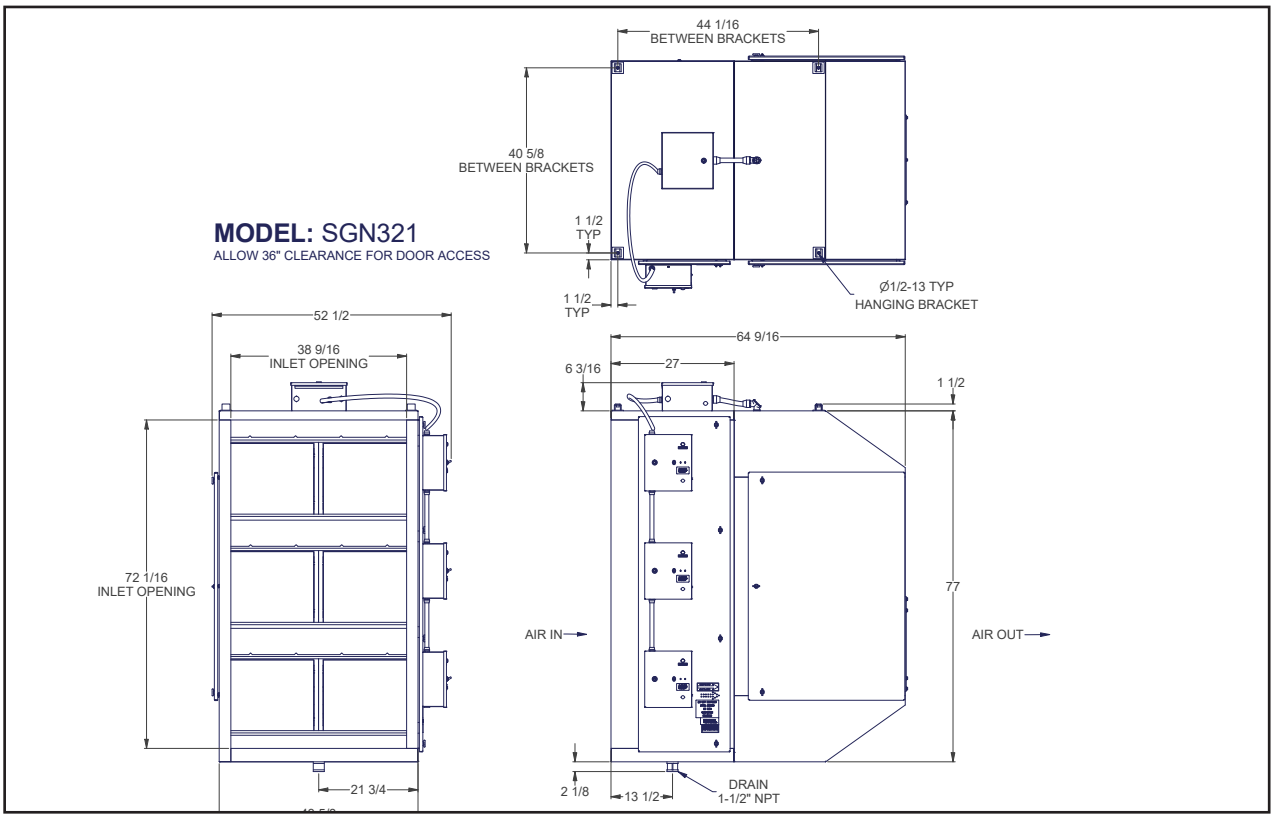

Prior to installation, refer to specifications in Figures 1, 2 and 3. Note mounting and clearance requirements and allow for proper plumbing and electrical access. Allow at least 36” for door swing and component access on the door side of the unit. All SGN models require 18” clearance from overhead obstructions for access to electrical junction boxes.

Model	Weight (lbs)
SGN121-NX	250
SGN121-NB	550
SGN122-NX	500
SGN122-NB	800
SGN221-NX	425
SGN221-NB	875
SGN222-NX	850
SGN222-NB	1300
SGN12T-NB	900
SGN321-NX	625
SGN321-NB	1275
SGN322-NX	1250
SGN322-NB	1900

Figure 3
SGN Unit Weights

4. INSTALLATION

Carefully remove the unit from the shipping container, inspecting for shipping damage. For ease of installation, open access door and remove unicells and filters from the cabinet.

Units suspended from the ceiling require 1/2” threaded rods installed in top corners of the units. See Figure 2 for mounting hole locations for all models. Additional support should be used for auxiliary equipment or ducting. The SGN should not be used for support of personnel or material.

Reinstall the components which were removed earlier to facilitate mounting the unit.

4.1 CEILING MOUNTING

SGN units are designed for suspended mounting, using 1/2” all-thread rod as shown in Figure 4. Customer should take care to ensure that roof trusses are adequate to support unit weight and support members. Turnbuckles greatly simplify rod installation. Rod length should be kept to a minimum 36” preferred). All SGN units have cross-broken sheet metal sumps with drains centered under the collection section.

4.2 COLUMN OR WALL MOUNTING

Units may be suspended from cantilevered supportson walls or columns. SGN12 and SGN32 units may be mounted against columns but should extend at least 24” from walls in keeping with good airflow practice. SGN22T units require 36” clearance from walls and columns for blower compartment access.

4.3 BOTTOM SUPPORTS

Units may be supported from underneath, provided care is taken to assure good drain connection and leak-free sumps.

4.4 DRAINS

All SGN units are supplied with 1 1/2” FPT drains. If dry material is to be collected then drain connection(s) should be plugged. Liquid is collected within the SGN unit, refer to Figure 4 for drain and drain trap installation.

4.5 ELECTRICAL CONNECTIONS

All SGN units are provided with terminal blocks in a top-mounted electrical box for incoming power connections. Units with blowers have box-mounted step-down transformers to supply required 115 volts to power packs. Units without blowers are equipped for 115 volt supply only (see Figure 5).

Power connection to the unit should be completed per wiring diagram inside the field wiring box.

Installation should comply with all state and local codes.
If no codes apply, installation should comply to National Electrical Code. (Refer to Section 12.2 for wiring diagrams).

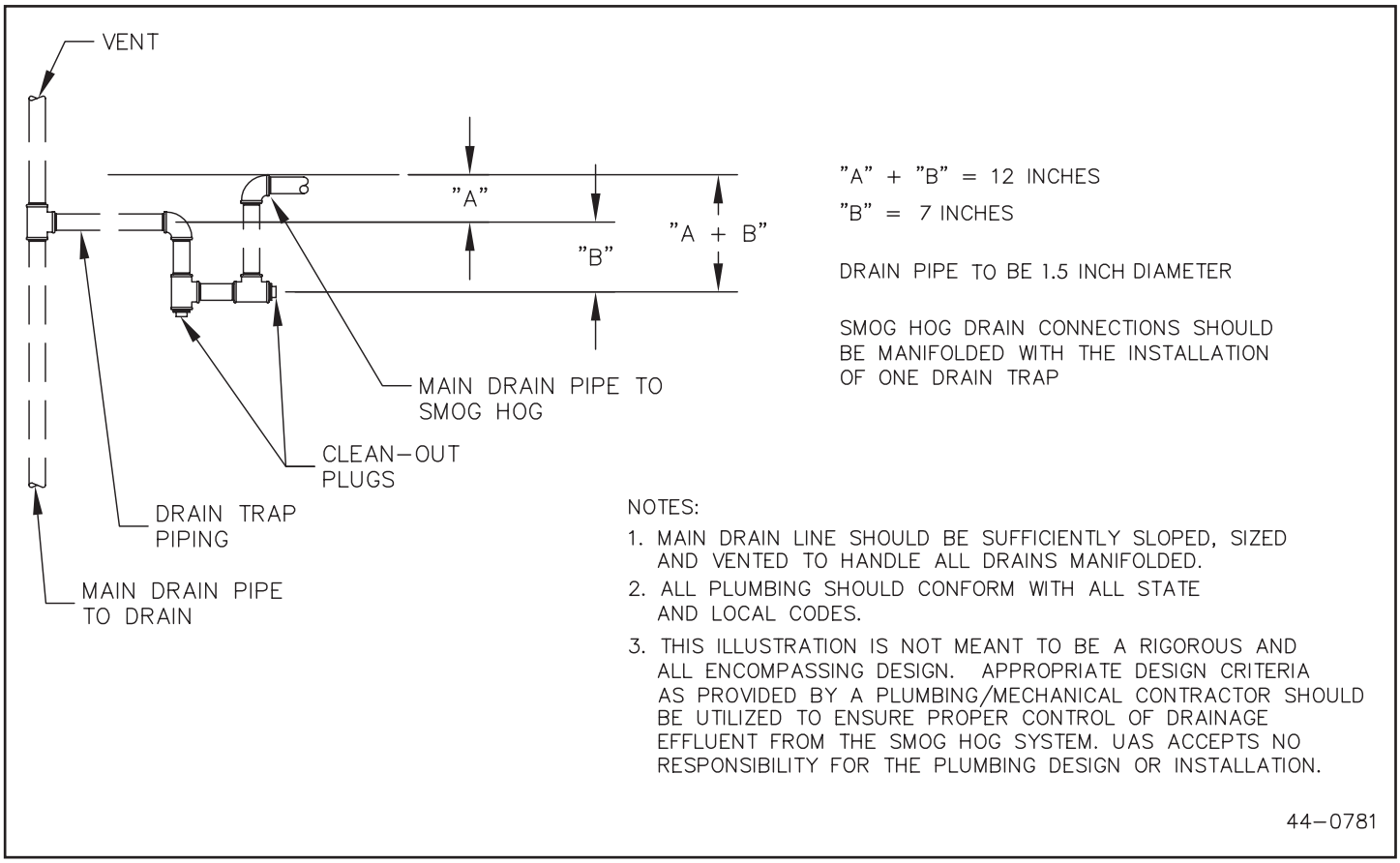

Figure 4
Drain and Trap Installation

⚠ CAUTION

When electrical control panels are supplied by others, an electrical interlock should be provided for the SGN power pack circuit and the unit exhaust blower. This provides safe operation of the SMOGHOG® SGN. Do not operate the power pack circuit with the system exhaust blower off line.

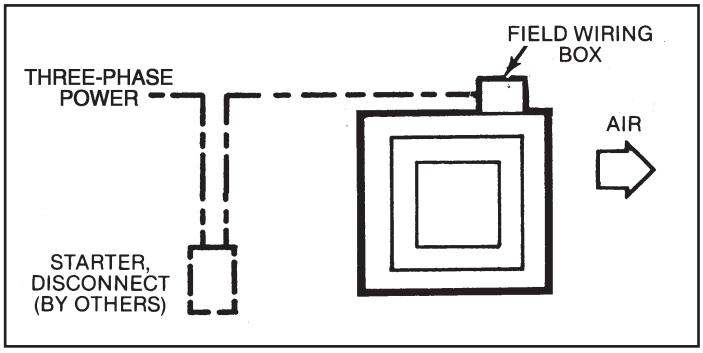

Figure 5
Units Without Blowers

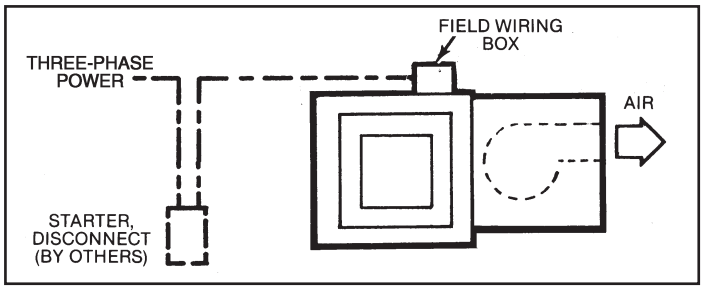

Figure 6
Blower Units

4.6 POWER PACK

Input to the high voltage power pack range from 90 to 130 VAC, 60 Hertz. This is supplied by the power line or the step-down transformer as shown by the wiring diagram inside the junction box.

4.7 AIR DIFFUSER

The adjustable air diffuser outlet grille can be set to any desired open position.
Unducted Installation (for area capture): Air diffuser should be set for maximum contaminant capture and even dispersion of clean air. The pattern should be that suggested by PARKER or your local SMOGHOG representative.

Ducted Installation (for direct capture): Air diffuser can be set to any position that is compatible with personnel comfort.

5. START UP AND OPERATION

5.1 INSTALLING COMPONENTS

If unicells and filter media were removed for shipment or installation, refer to Figure 18 for proper installation and electrical contact alignment. The filter media is utilized as pre- and after-filters. The SGN inlet plenum, if supplied by PARKER, could have filter media or impingement filters. The inlet plenum should be inspected that all filters are installed.

5.2 BLOWER ROTATION

For proper airflow, the blower should be operating in the correct direction. If the blower is operating in the reverse direction, air will move in the proper direction, but at significantly reduced rates. and may affect performance and life of any pre- or after-filters.

To check rotation:

1. Place SGN unit offline.
2. Open blower panel from SGN unit to observe rotation.
3. Place SGN unit online for less than one minute.
4. Place SGN unit offline.
5. As the blower pulley slows down, observe the direction of rotation.
6. Note directional arrow located on the blower housing.

⚠ WARNING

Extreme care should be exercised when operating blowers with motor/drive belts exposed. Loose fitting clothing can easily be drawn into these moving parts.

7. If blower wheel was not rotating in the correct direction, disengage main three-phase fused disconnect switch.

⚠ WARNING

Do not attempt to rewire electrical "live" connections.

8. Open power panel and reverse any two of the three wires at the terminal strip (LI, L2, and L3).
9. Engage the fused disconnect and place SGN unit online, confirming blower rotation.

5.3 BLOWER CURRENT MEASUREMENT

Using an ammeter measure the current amperage of the blower motor. The measurement should not exceed the full load ampere (FLA) rating identified on the blower motor nameplate. If the amperage is excessive, perform the following: check overload relay for proper setting per motor FLA, and measure blower rpm. Blower speed can be measured with a tachometer.

Call Parker Customer Service for blower rpm specification. The serial number of the unit is required to determine the blower rpm factory setting.

5.4 MOTOR VARIABLE PITCH PULLEY ADJUSTMENT

Increasing blower speed (RPM) will increase airflow (CFM) and current (amps). To increase speed, close the variable pitch pulley (from “normal,” as in Figure 7A, toward “full closed,” as in Figure 7B). Decreasing blower speed (RPM) will decrease airflow and current. To decrease speed, open the variable pitch pulley (from “normal,” as in Figure 7A, toward “full open,” as in Figure 7C). Five turns open (T.O.) is the maximum setting.

To adjust the variable pitch pulley, refer to Figures 7 and 8.

1. Loosen motor base nuts, adjust motor slide base and remove the drive belt.
2. Loosen set screw “A” to clear the drive key between pulley halves.
3. Remove the key.
4. Adjust pulley in increments of one turn to the desired setting.
5. Install key and tighten set screw “A.”
6. Install drive belt.
7. Loosen set screw “B.”
8. Align belt centerlines of motor and blower pulleys using straight edge and square.
9. Set belt tension using a belt tension gage.

⚠ NOTICE

Improper blower speeds adversely affect system performance. Contact the factory before adjusting motor variable pulley setting.

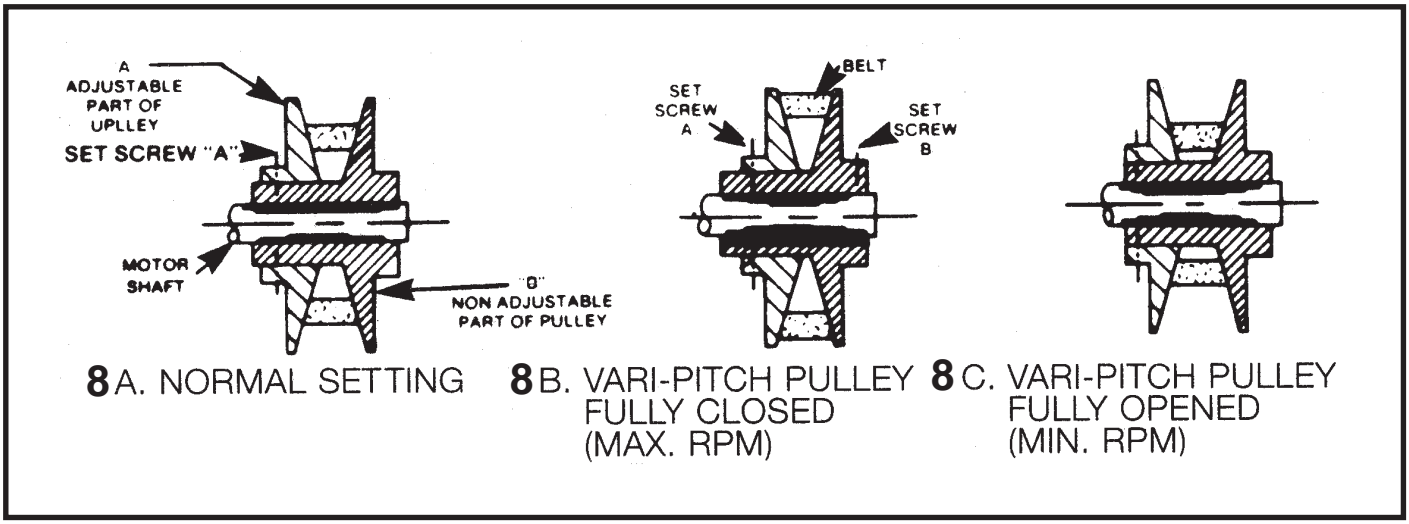

Figure 7
Motor Pulley Settings

5.5 BLOWER BELT TENSION ADJUSTMENT

The drive belt tension adjustment is critical within the first 24 hours of the system exhaust blower operation. During this 24 hour period the initial stretch of the belt occurs which requires a belt tension adjustment. If this tension adjustment is not completed the belt will wear prematurely, requiring a replacement. A drive belt tension gage should be used for adjusting belt tension. If fan belt tension is not per specifications set tension by adjusting the motor slide base, refer to Figure 8. Loosen four bolts holding the motor to the base and turn the adjustment bolt(s) on the base. Check with a steel straight edge to make sure that motor pulley and blower pulley is still aligned. Tighten motor mounting bolts.

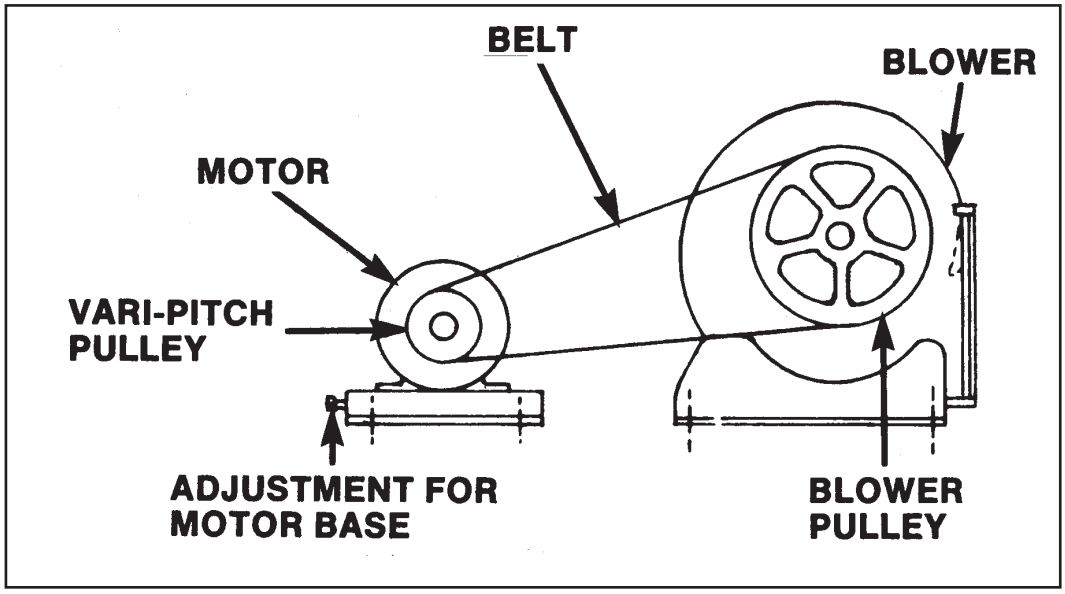

Figure 8
Motor/Blower Schematic

5.6 POWER PACK OPERATION

The power pack voltage range is 90 to 130 AC, 60 Hz, supplied by others. If the electrical panel is supplied by others the power pack circuit should be electrically interlocked with the blower circuit. The SGN unit will be operating in an unsafe mode if an electrical interlock is not installed. A power pack enclosure wiring diagram is illustrated in Section 12.2. The power pack indicator light on the unit is illuminated when high voltage output is within specifications. If the indicator light is flashing or fails to illuminate refer to Section 10 Troubleshooting.

5.7 POWER PACK ENCLOSURE PUSH ROD AND GROUNDING BAR

Each power pack enclosure has a captive, spring loaded “push rod” extending into the module.

Factory-set, the push rod serves the following purposes:

1. High voltage DC power is automatically shut down with the unicells removed from the module.
2. Whenever a module door or power pack enclosure lid cover is opened, the limit switch is disengaged, placing 115 VAC off line to the power pack.
3. Opening either of the module door or the power pack enclosure lid cover also releases a spring loaded push-rod, placing the grounding bar in contact with the cell door feed through insulator acorn nut, removing residual cell voltage.

⚠ NOTICE

The opening of only the module door is such that the grounding bar may not completely short out the cell circuit as a precaution. Perform the grounding procedure. Refer to Figures 12 and 13.

During normal operation, (refer to Figures 9, 10 and 11) with unicells in place, the component door (10) and the power pack door closed (3), the push rod (5) is in contact with unicell endplate (6). Push rod extension (1) is in contact with the ground bar (2) and bends to contact the limit switch (4) refer to Figure 10. Upon opening the component door (10), the push rod (5) is released from the unicell endplate (6) and spring (7) compression is relieved, breaking the contact of the push rod extension (1) from the ground bar (2), placing AC voltage off line to the power pack and causing the grounding bar to contact the acorn nut (8), refer to Figure 11. When opening the power pack door (3), the spring (7) remains compressed but the grounding bar (2) is pulled from the push rod extension (1) as the power pack door (3) is opened. AC voltage is placed off line to the power pack by opening the limit switch (4) which the unicells are grounded through the acorn nut (8), but with the contact spring (12) fully compressed, refer to Figure 11.

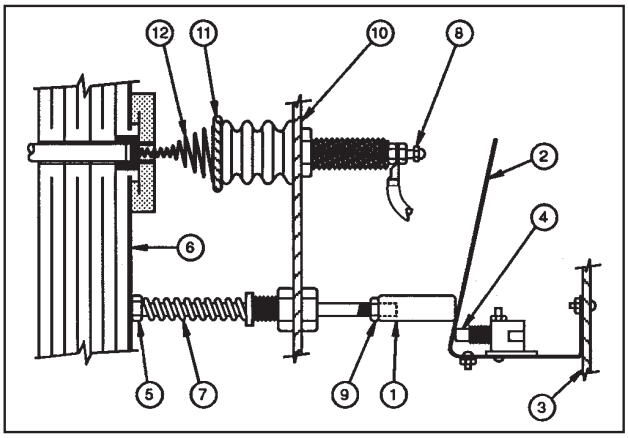

Figure 9
Component Door and Power Pack Door Closed

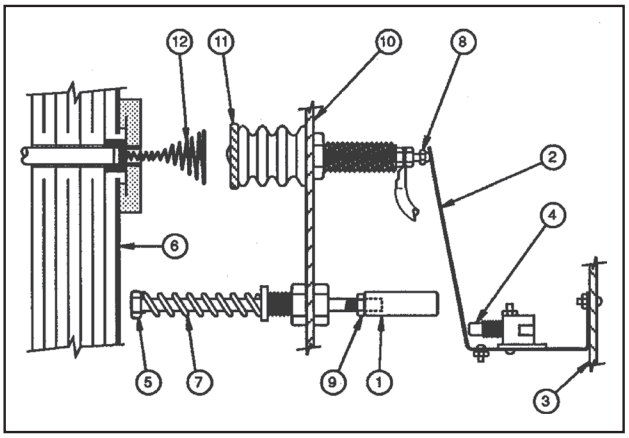

Figure 10
Component Door Open and Power Pack Door Closed

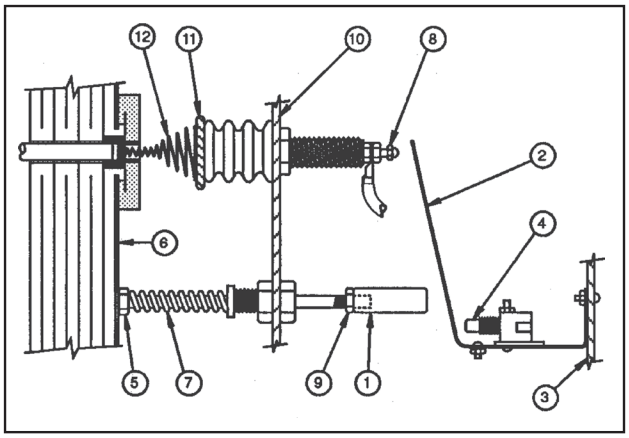

Figure 11
Component Door Closed and Power Pack Door Open

5.8 PLACING SGN ONLINE

Depending upon job specifications or other requirements, the SGN may be placed online by a customer supplied switch, or PARKER Remote Start/Stop Assembly. The indicator light on each power pack enclosure should be illuminated. The power pack enclosure toggle switch should be in the “up” position for the indicator light to be illuminated. If the indicator light is not illuminated after checking the toggle switch or the indicator light is flashing, refer to Section 10 Troubleshooting. For operation of auxiliary system equipment, refer manufacturer’s owner’s instructions for proper operating procedures.

6. MAINTENANCE AND MANUAL CLEANING

⚠ CAUTION

The SGN unit should be inspected frequently and collected contaminant removed from the system regularly to prevent excessive accumulation which may result in a flashover or risk of fire.

6.1 NORMAL MAINTENANCE

Once the unit is operational, periodic maintenance is necessary to assure proper performance. Follow a regular pattern of unit observation and log abnormal conditions. Since units reflect the process under control, maintenance patterns will vary accordingly.

6.1.1 CHECK POWER PACK ENCLOSURE INDICATOR LIGHTS

The SGN should be monitored daily by observing that the indicator light is illuminated to each power pack enclosure. Occasional arcing (flashing of an indicator light) is normal. An established arcing condition or dead short condition (continuous flashing of an indicator light) or the indicator light is not illuminated is not normal should be corrected.

- **Solid light** - Normal operation
- **Occasional flashing light** - Check for intermittent arcing, normal condition but will need servicing at some point.
- **Continuous flashing light** - product requires servicing; there may be internal arcing or dead short condition
- **None illuminated light** - faulty indicator light or product is not operating. Service immediately. Refer to SECTION 10 - Troubleshooting for any flashing or non-illuminated light conditions.

6.1.2. CHECK COMPONENT APPEARANCE WEEKLY

A visual of a module could identify problems such as moderate to extreme contaminant build up to the unicells even though the indicator lights are illuminated. This will be helpful in scheduling a manual cleaning of the components, refer Section 6.2. To check the condition of the unicells, place the SGN off line. Open the module door and perform the grounding procedure, refer to Figures 12 and 13, inspect the condition of the unicells, filters, door feed-thru insulators and interior of the cabinet. Experience will dictate whether contaminant build-up is excessive. Contaminant build up will decrease high voltage to the ionizer and collector cell circuit. When accessing a module, always clean the two door feed-thru insulators.

The following should be inspected.

Inspect the ionizer section of each unicell, noting the condition of the contact spring (distorted? bent? missing?), ionizer weld nut (missing?), ionizer standoff insulators (contaminant build up) and ionizer wires (contaminant build up? missing?), repair or replace. Ionizer wires should be taut and centered between ground plates. Ground plates between each ionizer wire should be straight and parallel. Inspect the collector cell section of each unicell, noting the condition of the contact spring (distorted? bent? missing?) cell contact screw (missing?), cell plates (bent? warped?) should be parallel and straight, repair or replace. Cell hot plates (smaller dimensional plate) should be centered between ground plates (larger dimensional plate). Cell plates should not have contaminant bridging between the cell plates or at support structure corners or the triangular insulators. Inspect filters, noting the condition (contaminant build up?, media separation?, bent frames?) should not have contaminant build up restricting airflow, repair or replace. Module drain sumps should not have moderate to extreme contaminant build up. Unicell module rear ground spring should be free of contaminant build-up for ground contact. Module and access doors gaskets should be in-place and in good condition.

6.1.3 MANUALLY CLEANING COMPONENTS, CABINET AND OTHER EQUIPMENT AS REQUIRED.

The unit components should be manually cleaned one to three month interval depending upon application/high voltage measurements refer to Section 6.2.

6.2 MANUAL CLEANING OF SMOGHOG COMPONENTS

There are a number of methods for manual cleaning, certain key cleaning criteria contribute to the effectiveness of every method. These include the type of detergent, detergent strength, water temperature, agitation/ impingement, duration, rinse procedure and dry-out time.

6.2.1 TYPE OF DETERGENT

In general, the detergent used on most hydrocarbons (e.g., oily residues) will be alkaline in nature. It is extremely important that the detergent have a built-in buffering agent to reduce aluminum deterioration.

6.2.2 DETERGENT STRENGTH

Detergent concentration in a mixture with water varies with the application from 1:1 to 20:1 parts water to parts detergent. For any contaminant condition, the best course is to use a cleaning solution per the detergent manufacturer's directions. More or less detergent may eventually be required for effective cleaning at reasonable detergent cost. The recommended factory detergent concentration is 5% (20:1).

CAUTION

Never mix caustic and alkaline detergents for manual or in-place cleaning. Detergent mixing could cause rapid heat release, gel formation or some other undesirable condition. Complete purging of system piping is necessary when changing detergents.

6.2.3 WATER TEMPERATURE

Detergents can be up to twice as effective in hot water. Hot water alone is very effective in softening built-up residue. Water temperature should be 140°F to 170°F, not to exceed 180°F.

6.2.4 AGITATION/IMPINGEMENT

These methods are virtually the same, with impingement being the most extreme form of agitation. Any liquid movement over built-up residue will remove a layer, allowing detergent to work on the next layer. A reduction in cleaning time duration usually results.

6.2.5 CLEANING CYCLE DURATION

In most cleaning methods, adequate time should be allowed for the detergent to remove the contaminant thoroughly. Reaction time will vary depending on detergent strength, temperature and agitation. Guidelines for mixing, heating and expected results are included on specification sheets for most detergents. Time is necessary for effective cleaning. Soaking may seem slower and less effective than high impingement and/ or hot water above 180°F for cleaning action, so personnel should be forewarned about using excessive pressure or temperature to shortcut the cleaning process. High pressure or stream spray cleaning until plate edges are shiny is not effective. Not only will penetration to the cell core not occur, but warping and bending of the plates may result as well. Patience and thoroughness of cleaning best preserve the integrity of the components in the long term. Soaking and gentle rinsing provides for best results.

6.2.6 RINSE PROCEDURE

Cleaned components should be rinsed off quickly and thoroughly to remove remaining contaminants. Some detergent residue will remain if rinsing is not performed. The residue may contribute to voltage bleed-down when the unicell is placed in operation. Also, even though the detergent is “buffered” prolonged contact could cause minor corrosion. Hot water should be used for rinsing.

6.2.7 DRY-OUT TIME

Unicells and filter media should be dry before the SGN is placed into operation. Startup of a wet system will cause dead short conditions to the ionizer and collector cell circuits. Wet unicells and filter media should be placed in a warm room for drying. Techniques such as hand wiping insulators and blow drying unicells and filter media with compressed air will decrease drying time. Another method for drying cleaned components is installing the unicells and filter media in the SGN and placing on the system blower on line, with all power pack enclosure toggle switches placed in the “off” position for 30 minutes.

7. MANUAL CLEANING METHODS

The manual cleaning method selected will depend on the type of contaminant, rate of deposit, facility limitations such as cleaning time windows (process downtime) and available utilities. All cleaning methods listed in this section are acceptable.

7.1 SOAK TANK

This method involves placing unicells and filter media in an agitated solution of hot water and detergent and is the most effective method. With proper detergent selection, this procedure will quickly remove most contaminants. Unicells and filter media should not be placed in highly concentrated detergent solutions or allowed to soak for extended periods, (e.g., overnight), especially at elevated temperatures. Extended soaking (e.g., days) in solvent or detergent solution will degrade components over time and should be avoided.

7.2 PORTABLE PRESSURE WASHER

A self-contained pressure washer with a spray wand can be an effective cleaning method, providing it is used with caution. Care should be taken not to expose the unicells to close-up and prolonged blasts of high pressure/temperature, causing cell plate deformity, requiring a replacement set of unicells and filter media.

7.3 AUTOMATIC PARTS WASHERS

Certain commercially available units combine and automate the features necessary for effective cleaning, including water heating, detergent injection, agitation, rinsing and drying.

7.4 OTHER CLEANING CONSIDERATIONS

The previous methods address the cleaning of unicells and filter media. The SGN cabinet should also be periodically cleaned (i.e., during normal planned downtimes) to reduce contaminant build up. High voltage output of the power packs should also be checked when manual cleaning is performed.

8. APPEARANCE OF COMPONENTS AFTER CLEANING

Components should have a clean, not necessarily “new,” aluminum appearance. Moderate discoloration will not affect system efficiency. Checklist for acceptable components.

8.1 UNICELL

1. Frame, end plates and cell plates are free of contaminant build-up (residual contaminant has been removed between plates and at comer supports).
2. The frame is square, cell plates are parallel and cell hot plates are centered between ground plates.

3. Ionizer standoff insulators and cell triangular insulators are cleaned (no residual coating). Cracked or carbon-tracked insulators have been replaced.
4. Ionizing wires and springs are intact and taut, centered between plates and free of coatings.
5. Contact springs and contact screws are properly located, and replace missing contact hardware. Refer to Figure 18.
6. Contact springs are not deformed.
7. Bent or broken parts have been repaired or replaced.

8.2 PRE-FILTERS/AFTER-FILTERS

1. Aluminum media and frame are free of contaminant.
2. Frame is square and media is intact.
3. Filters are always installed with drain holes down and arrow on each frame pointing in the direction of airflow

8.3 CABINET

1. Door feed-thru insulators are cleaned and white.
2. Door gaskets are cleaned and intact.
3. Component tracks are free of contaminant build up.
4. Module drain sumps are cleaned and free-flowing.
5. Interior is free of extreme contaminant build-up.
6. Blower wheel and housing is free of extreme contaminant build-up.
7. Preconditioning equipment, if so equipped, (inlet plenum with baffle filters, cooling coils, etc.) has been checked for excessive pressure drop, cleaned if necessary.

9. PART REPLACEMENT PROCEDURES AND ADJUSTMENTS

9.1 IONIZER WIRE REPLACEMENT (REFER TO FIGURES 15 AND 16)

1. Remove damaged wire from each spring.
2. Replace spring if damaged or missing.
3. Loop one end of new wire over bottom spring. Pull top wire loop with pliers over top spring.
4. Release spring gently. Wire should now be taut and centered.

NOTE: If replacement wires are not available, remove broken wires and tension springs from the ionizer section. Install unicell into the cabinet until parts are available.

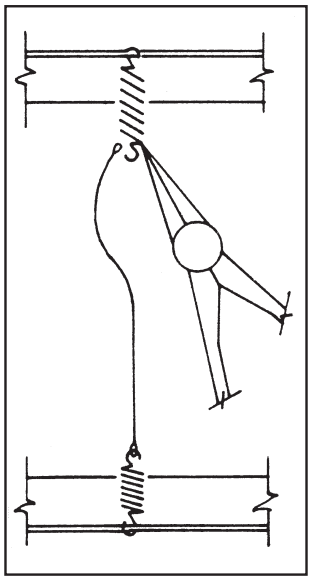

Figure 14 Attaching New Ionizer Wire

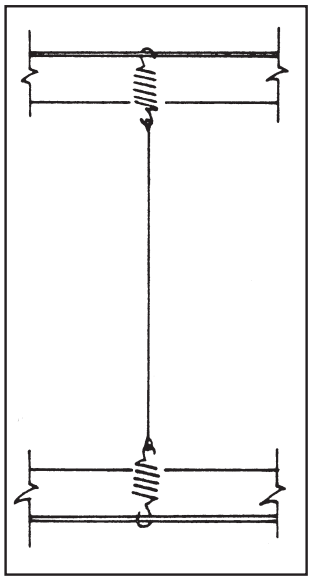

Figure 15 Correct Ionizer Wire Position

9.2 DOOR FEED-THRU INSULATORS

1. Place toggle switch in “off” position.
2. Open power pack enclosure lid cover, perform grounding procedure refer Figures 12 and 13,
3. Remove high voltage wire by removing #10-32 hex nuts.
4. Remove insulator retaining nut.
5. Open module door and remove the long screw from the insulator.
6. Remove the insulator from the interior of the module door by using a hammer.
7. Clean silicone sealant from module door surface.
8. Install replacement insulator, reversing the above procedure, and applying a thin coat of Silicone sealant to base of insulator.

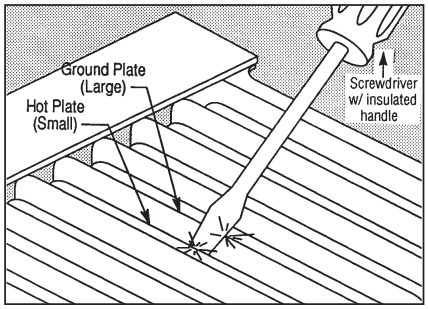

Figure 12
Grounding the Collecting Section

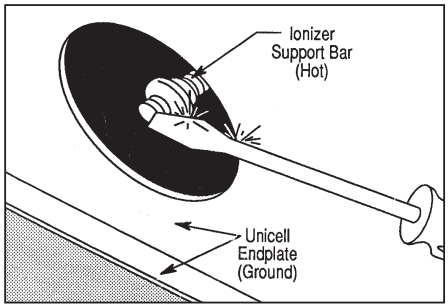

Figure 13
Grounding the Ionizing Section

9.3 INDICATOR LIGHT

1. Open the power pack enclosure lid cover.
2. Disconnect the red and black wires from the indicator light which is connected to wires “9” and “2”.
3. Remove indicator light installation nut. The indicator light located on each power pack enclosure is polarity sensitive. For proper operation, the two wires from the indicator light should be connected as follows, red wire connected to “9” wire from the power pack, black wire connected to “2” wire from the power pack. If the wires are reversed, the indicator light will not illuminate.

9.4 BLOWER LUBRICATION

The blower bearings require lubrication at a 2 to 3 month interval (petroleum lubricant lithium NLGI grade 2 grease). The bearings should be lubricated with the blower in operation. A hand operated grease gun is required performing one to two injections slowly, do not exceed two injections. Excessive injections/grease will cause bearing seal failure, contributing to bearing failure.

9.5 COMPONENT ACCESS DOOR GASKET REPLACEMENT

As shipped from PARKER, gasketed component access doors have been carefully sealed against leakage of liquids from the air cleaner cabinet. Should leakage occur, slight adjustment of the latch paws on the back of the door handles may solve the problem. However, extreme care should be exercised in compressing door gasket beyond its design limits. Before adjusting for gasket deflection, check for the following:

1. Door or cabinet damage.
2. Deformed or torn gasket.
3. Leakage from some other source.

Collection components should be removed and replaced with great care to preserve gasket integrity. Should damaged gasket require replacement, call PARKER Customer Service for the proper gasket material.

GASKET LENGTHS

PARKER MODEL	NUMBER OF DOORS	LENGTH PER DOOR (FT.)
SGN12	1	6
SGN22	1	10.5
SGN12T	2	6
SGN32	1	16

TO CHANGE GASKET

Refer to Figure 16

1. Remove existing gasket, making sure to scrape off any residual silicone sealant.
2. Trim one edge of gasket neatly and evenly.
3. The door gasket internally has three lips to one side of the gasket and one lip to the other side. The door gasket should be installed with the three lips towards the interior of the cabinet.
4. The door gasket should be formed to the complete cabinet flange before applying silicone sealant. Place the trim edge at the top center of the cabinet lip edge and press gasket in place, ending at the same location. Do not trim excess door gasket.
5. Remove door gasket and apply silicone sealant to the inside of gasket or on the inside edge of the cabinet flange. Place the trim edge at the top center of the cabinet lip edge and press gasket in place, ending at the same location. Trim excess gasket and remove silicone sealant. Make sure the gasket is firmly bottomed on the flange by tapping with a rubber mallet or the gasket may not seal against the door properly.
6. Check that the distance from the inner face of the access door to the latch tongue measures 7/8”. Slight adjustments may be necessary due to sheet metal variations.

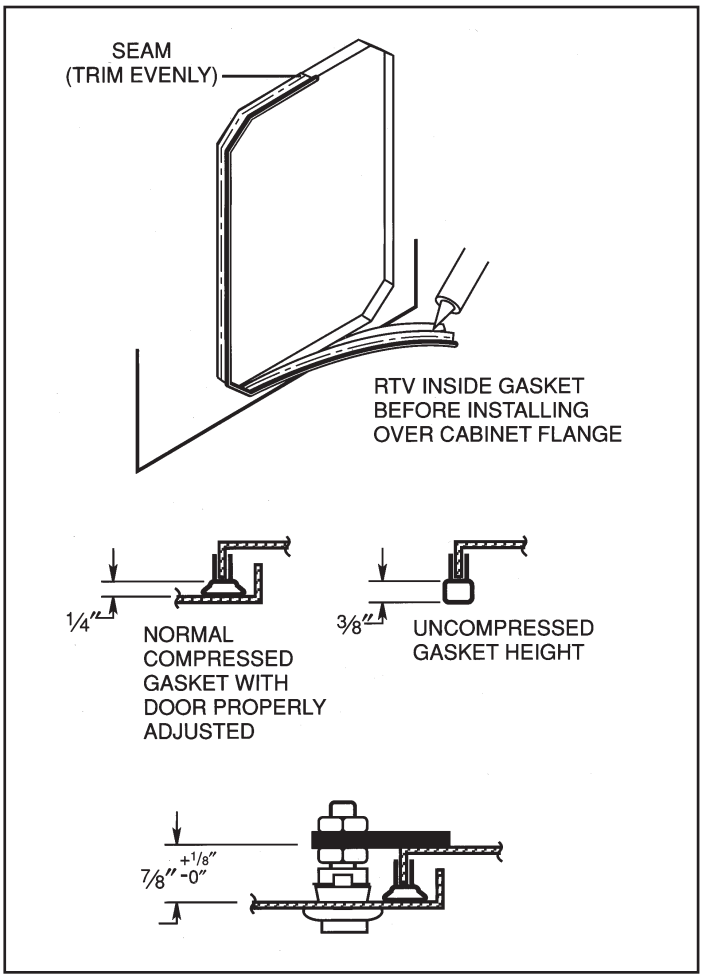

Figure 16
Door Gasket Installation

9.6 POWER PACK ENCLOSURE PUSH ROD ADJUSTMENT

Tools required:

- 6” adjustable or 5/16” open-end Wrench. Refer to Figure 9.

1. Close module door (10) with unicells installed.
2. Open power pack enclosure lid cover (3).
3. Loosen 5/16” hex jam nut (9), then back off push rod extension (1) to end of threads.
4. Close power pack enclosure lid cover, listening for point where limit switch (4) is engaged.
5. Adjust rod extension (1) inward until limit switch (4) engages approximately one inch before the power pack enclosure lid cover closes (3).
6. Tightened hex jam nut.
7. Close power pack enclosure pack lid cover (3) and latch.

10. TROUBLESHOOTING

The SGN unit can consist of one or more modules. Each module represents an independent collection system, of 2 unicells in series with a power pack enclosure. The power pack enclosure indicator light is the reference in determining the module status. The indicator light illuminated represents a working module, usually within high voltage specifications. An indicator light flashing or not illuminated exhibits an abnormal condition.

TOOLS REQUIRED

- Multimeter
- High voltage probe accessory for the multimeter
- High voltage test cables (2), 3' in length with test clips at each end
- Basic hand tools
- One power pack (PARKER Part Number 21-1216D)
- AC cable with three prone plug (for the wall receptacle), opposing end of cable should have two connectors for the power pack and a test clip for the ground wire. The ground wire should be secured to the ground stud on the power pack.

PERFORM BEFORE TROUBLESHOOTING

The following should be checked to the module(s) in which the indicator light(s) is flashing or is not illuminated. Corrections should be completed and parts replaced.

- Toggle switch is in the on position to the power pack enclosure.
- Check adjustment of the push rod which engages the interlock switch refer to Section 9.6.
- Proper electrical alignment to the unicell components. Refer to Figure 18.
- The proper number of unicells are installed to the module.
- Unicell components have a moderate to extreme contaminant build up, manually clean the unicell components.
- Ionizer wires and tension springs missing or broken, remove broken wires and springs from the drain sump.
- Ionizer standoff insulators, cell triangular insulators, and or door feed through insulators display moderate to extreme contaminant build up, broken or carbon tracked insulators (imbedded black streak which cannot be removed by cleaning, replace insulator).

10.1 TROUBLESHOOTING PROCEDURE

⚠ CAUTION

Risk of electrical shock. The high voltage circuits to the ionizer and collector should be grounded before removing the power pack, high voltage wires, door feed through insulators and unicell(s). The grounding procedure can be accomplished by waiting one minute after placing the toggle switch in off position or by referring to Figures 12 and 13. An internal resistor within the power pack discharges the residual high voltage. The grounding procedure statement is not identified within the troubleshooting steps but should be performed. The power pack total current output is limited to a maximum of 5 milliamps to assure personnel safety.

⚠ WARNING

Power pack enclosure(s) service voltage is 120VAC. This can be lethal. Voltage (120 VAC) is present within the power pack enclosure even though the toggle switch is placed in the off position.

HIGH VOLTAGE SPECIFICATIONS:

Ionizer Circuit Operating Range: 10.0 to 11.8 KVDC

Collector Cell Circuit Operating Range: 5.0 to 7.5 KVDC

There are two factors which will elevate ionizer voltages above 12.0 KVDC.

1. The ionizer wires are heavily coated with contaminant (two to three times or greater, the diameter of the wire). This will decrease collection efficiency.
2. There are “run away” voltages to the power pack requiring power pack replacement, above 12.0 KVDC to the ionizer circuit, and 7.5 KVDC to the collector cell circuit.

There will be continuous cell arcing if cell voltages exceed 7.5 KVDC. This is also caused by “run away” voltages to the power pack requiring power pack replacement. A high voltage measurement can be performed by removing both the high voltage wires from the power pack to determine high voltage output or refer to “Testing the Power Pack” in the “Bench Testing Procedure.” The high voltage measurement should not exceed “High Voltage Specifications.”

If there is a dead short condition or arcing condition usually the problem is within the collector cell. The power pack should be confirmed that the power pack is operational, start with step (1), before proceeding to the step (2). In the event of a dead short condition the power pack is designed to “shut down” the high voltage to the ionizer and collector cell circuits causing the indicator light to flash. When the dead short condition is removed possibly by the exhaust blower or In Place Cleaning System (if so equipped) or manual cleaning the high voltage output will return to normal. The indicator light will be illuminated. The power pack is self protecting from dead short conditions.

Each power pack enclosure is equipped with an interlock switch for the power pack 120 VAC circuit. The interlock switch should be engaged (manually or by other means) after placing the toggle switch in the on position and disengaged when placing the toggle switch in the off position during the troubleshooting procedures.

All connectors on the power pack are identified with name and wire number with the exception of the ground connector (green wire to this connection) Refer to Figure 18. Step 1 and Step 2 do not require a high voltage probe.

The ionizer section supports 10 mil tungsten wires which apply a high voltage positive charge to the contaminant particles.

The cell section contains plates alternately charged collecting the charged particles from the ionizer section.

High voltage problems can generally be isolated by reference to the indicator light. If the indicator light(s) are illuminated and the unit is moving air but efficiency is below normal (unicells not dirty, smoke discharging from the exhaust blower) check for properly aligned unicells, refer to Figure 18.

A high voltage probe is required to measure high voltages to the ionizer and collector circuits to the unit and performing the “Bench Test Procedure.” As an accessory, a high voltage probe can be purchased for a multimeter.

STEP 1

PROBLEM: Indicator light is flashing or not illuminated

PROCEDURE: Checking the power pack

The toggle switch should be placed in the off position to the power pack enclosure, open power pack enclosure lid door, and disconnect both high voltage wires (Ionizer #8 and Collector #7) from the power pack. The high voltage wires should carefully be placed away from the ionizer and collector cell power pack connectors, eliminating the high voltage wires from contacting the power pack connectors. Place the toggle switch in the on position and engage interlock switch; the indicator light should be illuminated. If the indicator light is illuminated the power pack is operational, proceed to step (2). If the indicator light is flashing (high voltage wires #8 and #7 disconnected from the power pack), the power pack requires replacement. If the indicator light is not illuminated proceed with following until the problem is corrected.

Verify there is 120 VAC to the power pack, place the toggle switch in the off position and remove the 120 VAC wires from the power pack terminals 5 and 6. Connect the multimeter to the two 120 VAC wires and place the toggle switch in the on position and engage the interlock switch. If 120 VAC is not present there are problems upstream from the power pack.

The following steps refer to the wiring diagram within the power pack enclosure or In Section 12.2.

1. Confirm 120 VAC to the power pack enclosure terminals
2. Verify the interlock switch operation (120 VAC) to the power pack enclosure (measure voltage to the primary side of the interlock switch and engage interlock switch before measuring voltage to the secondary side). The mechanical engagement of the limit switch should be checked. Refer to Section 9.6.
3. Inspect the fuses or circuit breaker to the power pack circuit.
4. Ensure the tightness of all wire terminal screws and inspect for disconnected wires at the power pack enclosure or remote electrical panel terminal blocks.
5. Indicator light and circuit should be checked. Check wire connections (#9 and #2) to the power pack, and to the indicator light assembly. A LED requires correct wiring polarity. The LED will not illuminate if the wiring polarity is incorrect. The power pack has two terminals for the indicator light, identified as #9 (positive, red), and #2 (negative, black). The factory wiring numbers are identical.
6. LED with two wires (red and black) from the LED assembly, wire #9 to the red wire, wire #2 to the black wire.
7. VDC measurement with wires #9 and #2 disconnected from the power pack: 7.9 to 10.0, with connected 3.8 to 5.0, #9 and #2.
8. Place toggle switch in the off position and connect all wires which have been disconnected.
9. Parts should be replaced as required.

STEP 2

PROBLEM: Indicator light is flashing.

PROCEDURE: Checking the unicell components

Do not proceed with step (2) until step (1) is completed. The following steps are the process of elimination in identifying the problems to the ionizer/collector cell circuit.

There are four conditions which could occur with a flashing indicator light.

1. The high voltages are below specifications to the ionizer and or the collector cell circuit(s).
2. There is an arcing condition to the ionizer and or collector cell circuit(s).
3. There is a dead short condition.
4. The power pack has failed. Refer to step 1.

(a) Place the toggle switch in the off position, and
open power pack lid door. Disconnect high voltage wire #8 to the ionizer connector with high voltage wire #7 (Collector) connected on the power pack and place toggle switch in the on position and engage interlock switch. The indicator light should be illuminated. If so, the cell circuit is operational proceed to (b). If indicator light is flashing perform the following:

- Place toggle switch in the off position, open component door, and remove the unicell(s).
- Place toggle switch in the on position, and engage interlock switch. The indicator light should be illuminated. If the indicator light is illuminated the problem is within the collector cell section. If the indicator light is flashing the problem is the high voltage door feed through insulator (dirty, cracked, carbon tracking) and or the high voltage wire (broken wire or wire insulation has deteriorated causing a dead short condition).

Parts should be replaced as required.

Inspect the unicell(s) for the following:

COLLECTOR CELL CONDITIONS CAUSING FAILURE

- Dirty collector cell(s) (contaminant build up bridging the cell plates and or on cell triangular insulators) requiring manual cleaning.
- "Wet" collector cell(s), not properly dried after a wash cycle or manual cleaning procedure, use compressed air to accelerate the drying time.
- Deformed collector cell contact springs contacting a "grounded surface".
- Misaligned contact springs (contacting a grounded surface) between the outer and inner most cells if module is equipped with two unicells and or at high voltage feed through insulators. Refer to Figure 19.
- Bent cell plate(s) contacting the opposing cell plate(s).
- Warped cell plate(s) which could be due to high duct operating temperature, consult PARKER.
- Carbon tracking to the cell high voltage feed through insulator and or cell triangular insulators, imbedded black streak which cannot be removed by cleaning (replace insulator.)
- Surface oxidation to unicell component requiring a replacement.
- Unicell is structurally weak, loose steel rivets, deterioration to cell plate spacers or paper thin cell plates due to utilizing the improper detergent.

Parts should be replaced as required, install unicell(s).

Sometimes a flashing indicator light will clear itself by removing the unicell(s) from the module and then installing the unicell(s) back into the module.

The Bench Test Procedure will determine which unicell(s) are causing a flashing indicator light, refer to Section 10.3.

Place toggle switch in the off position; connect all wires which have been disconnected and install unicell(s).

(b) Indicator light is illuminated with the high voltage wire #7 connected to the collector cell connector on the power pack. Place toggle switch in the off position and connect high voltage wire #8 to the ionizer connector on the power pack. Place the toggle switch to the on position and engage the interlock switch.

The indicator light should be illuminated? If so, the unicell(s) are operational. If the indicator light is fashing perform the following:

- Place power in the off position, open the component door, and remove unicell(s).
- Place toggle switch in the on position and engage interlock switch. If the indicator light is illuminated the problem is within the ionizer section. If the indicator light is flashing the problem is the high voltage door feed through insulator (dirty, cracked, carbon tracking) and or the hv wire (broken wire or wire insulation has deteriorated causing a dead short condition).

Parts should be replaced as required, install unicell(s).

Inspect the unicell(s) for the following:

IONIZER CONDITIONS CAUSING FAILURE

- Dirty ionizer(s) (contaminant build up) requiring manual cleaning.
- "Wet" ionizer(s), not properly dried after a wash cycle or manual cleaning procedure, use compressed air to accelerate the drying time.
- Deformed ionizer contact springs contacting a "grounded surface."
- Misaligned contact springs (contacting a grounded surface) between the outer and inner most ionizer, if module is equipped with two unicells, or at the ionizer high voltage feed through insulator. Refer to Figure 18.

- Broken ionizer wires.
- Contaminant build up and or cracked ionizer stand off insulators and or high voltage door feed through insulators.
- Carbon tracking (black streak) to the ionizer stand off insulators and or high voltage door feed through insulator (replace insulator)
- Ionizer wires not “taut” contacting the ground plates.
- Bent ionizer wire support bar contacting a “grounded surface.”
- Bent ground plates contacting the ionizer wires.
- Surface oxidation to unicell component requiring a replacement.
- Unicell is structurally weak, loose steel rivets, deterioration to cell place spacers or paper thin cell plates due to utilizing the improper detergent.

Parts should be replaced as required.

Sometimes a flashing indicator light will clear itself by removing the unicell(s) from the module and then installing the unicell(s) back into the unit.

The Bench Test Procedure will determine which unicell(s) are causing a blinking indicator light.
Refer to Section 10.3.

Place toggle switch in the off position; connect all wires which have been disconnected and install unicell(s).

10.2 HIGH VOLTAGE PROBE MEASUREMENTS

A high voltage probe (refer to manufacturers instructions) is required to measure high voltage output from the power pack. The component door should be closed with unicell(s) installed, the indicator light illuminated and high voltage wires #8 and #7 connected to the power pack. Refer to Figure 17. If the indicator light is flashing or not illuminated perform step 1 and if required step 2.

“With Load” is a measurement with high voltage wires #8 and #7 connected to the power pack and unicell(s) installed.

1. Place toggle switch to the power pack enclosure in the on position.
2. Open the lid door to the power pack enclosure and connect the ground wire from the high voltage probe to the bare metal push rod. Refer to Figure 9.
3. Engage the interlock switch and place the tip of the high voltage probe to the ionizer door feed through insulator bolt. The high voltage measurement should be 10.0 to 11.8 KVDC.
   If the ionizer voltage is below specifications refer step 2, “Ionizer Conditions Causing Failure.” Bench Testing may also be required. Low ionizer voltage will decrease the collector cell voltage but low cell voltage will not affect the ionizer voltage.
4. Engage the interlock switch and place the tip of the high voltage probe to the collector cell door feed through insulator bolt. The high voltage measurement should be 5.0 to 7.3 KVDC. If the collector cell voltage is below specifications refer step 2, “Collector Cell Conditions Causing Failure.” Bench Testing may also be required.

“No Load” is a measurement of the power pack with high voltage wires #8 and #7 disconnected from the power pack.

1. Place toggle switch to the power pack enclosure in the off position.
2. Remove the high voltage wires #8 and #7 from the power pack gently bend high voltage wires to eliminate the high voltage wires from touching the power pack connectors.
3. Place toggle switch to the power pack enclosure in the on position.
4. Engage the interlock switch and place the tip of the high voltage probe to the ionizer and to the collector power pack connectors. The high voltage measurement should be 10.0 to 11.8 KVDC to the ionizer and 5.0 to 7.3 KVDC to the collector cell. If high voltage is below specifications to one or both circuits replace the power pack.

10.3 BENCH TEST PROCEDURE

This procedure can be utilized to determine an electrical problem with the unicell(s) or a power pack or testing the unicell(s) after manual cleaning.

Do not use a power pack that is not within the high voltage specifications, refer to "Testing The Power Pack".

PROCEDURE

TESTING THE IONIZER

1. Select one unicell to be tested.
2. Connect one high voltage wire to the ionizer contact spring and to the power pack connector identified as "Ionizer #8".
3. Connect the other high voltage wire (use as a ground wire) to the metal frame of the unicell and to the ground stud on the power pack.
4. AC cable should be connected to the power pack connectors 5 and 6 with ground wire secured to the ground stud on the power pack.
5. Connect AC cable plug to the wall outlet.
6. Measure high voltage with the high voltage probe at the ionizer contact spring. Ionizer voltage should be 10.0 to 11.8 KVDC, not to exceed 12.0 KVDC. If ionizer voltage exceeds 12.0 KVDC, the ionizer wires are moderately to extremely coated with contaminant (clean ionizer wires), or the power pack is not within specifications.
7. If there is an arcing condition, determine the problem and repair.
8. Disconnect AC cable plug from the wall outlet.

Refer to Step 2 "Ionizer Conditions Causing Failure"

Parts should be replaced as required.

TESTING COLLECTOR CELL

1. Select one unicell to be tested.
2. Connect one high voltage wire to the collector cell contact spring and to the power pack connector identified as "Collector #7".
3. Connect the other high voltage wire (use as a ground wire) to the metal frame of the unicell cell and to the ground stud on the power pack.
4. AC cable should be connected to the power pack connectors 5 and 6 with ground wire secured to the ground stud on the power pack.
5. Connect AC cable plug to the wall outlet.
6. Measure high voltage with the high voltage probe at the contact spring cell. Collector cell voltage should be 5.0 to 7.5 KVDC, not to exceed 7.5 KVDC. The collector cell will not maintain high voltages above 7.5 KVDC. The collector cell will continuously arc. Usually this condition is caused by a power pack above the "High Voltage Specifications." The power pack should be replaced.
7. If there is an arcing condition, determine the problem and repair.
8. Disconnect AC cable plug from the wall outlet.

Refer to Step 2 "Collector Cell Conditions Causing Failure".

Unicell may not be within high voltage specifications, even though manually cleaned, due to the service "age" of the unicell. The unicell should be replaced.

Parts should be replaced as required.

TESTING THE POWER PACK

1. Connect AC cable to the power pack connectors 5 and 6 with the ground wire secured to the ground stud on the power pack.
2. Connect AC cable plug to wall outlet.
3. Measure high voltage with high voltage probe at the connectors “Ionizer #8” and “Collector #7”, refer to high voltage specifications.
4. Disconnect AC cable plug from the wall outlet.
5. Replace power pack if high voltage measurements are above or below high voltage specifications.

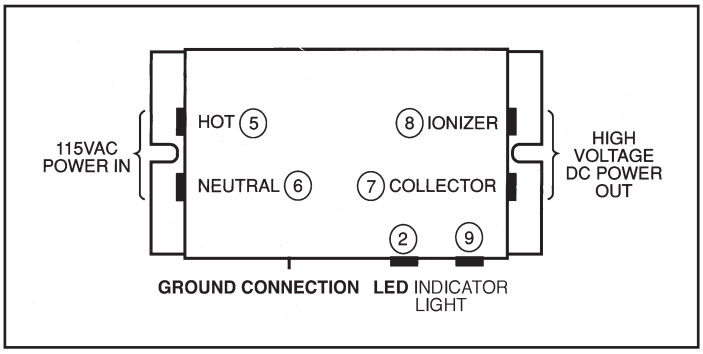

Figure 17
Power Pack Input/Output Connections

10.4 TROUBLESHOOTING GUIDE

PROBLEM	POSSIBLE CAUSES	RECOMMENDED SOLUTIONS
Unit will not start or only operate a short duration	Main electrical disconnect switch in the off position.	Place disconnect switch in the on on position.
	The unit start/stop switch is in the off position.	Press the unit start switch in the on position.
	Fused have failed.	Replace the fuses.
	Overload relay has tripped.	Compare FLA rating of the motor to the overload relay setting, adjust as required and measure amperage.
	Poor wire connections.	Check wire connections at motor and all wire terminals.
Insufficient airflow	Blower rotation is incorrect.	Check blower rotation per directional arrow on the blower housing, refer to Section 5.2.
	Blower/motor drive belts have failed.	Check drive belts and motor condition.
	SGN access door(s) are open.	Close SGN access door(s).
	SGN has extreme internal contaminant build up due to poor maintenance.	Manually clean the SGN unit, refer to Section 6.
	Internal debris within the duct and or SGN cabinet.	Remove debris.
The power pack enclosure indicator light is not illuminated	Power pack enclosure toggle switch is in the off position.	Check toggle switch position.
	Power pack enclosure(s) push rod assembly is not properly adjusted.	Refer to Section 9.6
	Power pack has failed.	Refer to Section 10.
The power pack enclosure indicator light is flashing.	Power pack enclosure(s) toggle switch are in the off position.	Check power enclosure(s) toggle switch position.
	Unicells are not properly electrically aligned.	Refer to Figure 19.
	Unicell(s) have a moderate to extreme contaminant build up.	Refer to Section 6.0.
	Power pack has failed.	Refer to Section 10
System efficiency is poor. Smoke is discharging from the SGN unit exhaust louvers.	Power pack enclosure(s) push rod assembly is not properly adjusted.	Refer to Section 9.6.
	Fuses have failed to the power pack circuit.	Replace fuses.
	Unicells are not properly electrically aligned.	Refer to Figure 19.
	Air volume (ACFM) is not within specifications.	Measure air volume, call PARKER Customer Service for specifications.

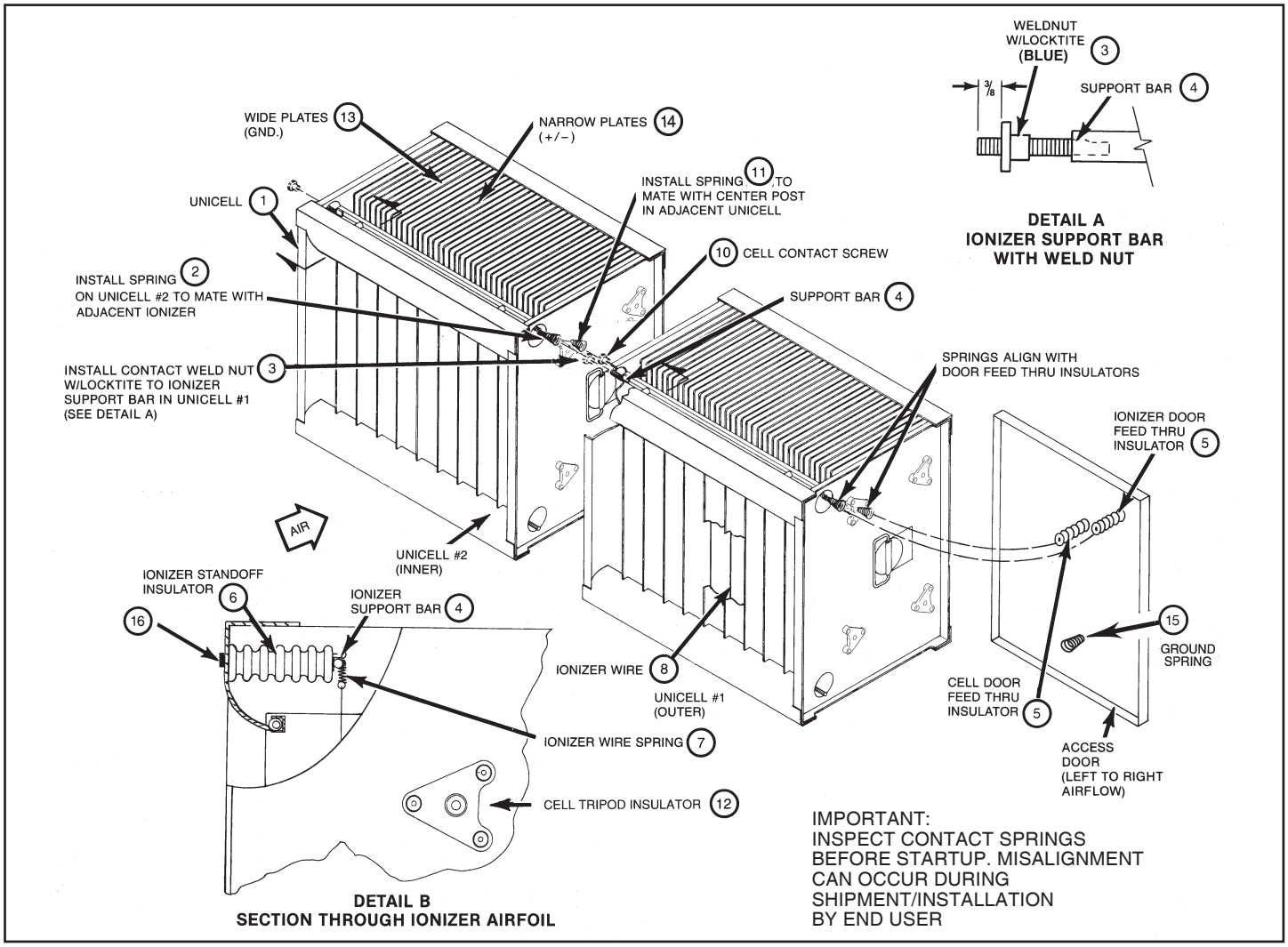

Figure 18 Property Aligned SGN Unicell Assembly

REPLACEMENT PARTS

ITEM NO.	PART NO.	DESCRIPTIONS	QUANTITY REQUIRED
1	02-1921	UNICELL ASSEMBLY	1
2	36-0068	IONIZER CONTACT SPRING	1
3	30-0452	CONTACT WELD NUT	1
4A	18-0674	IONIZER SUPPORT BAR (TOP)	1
4B	18-0670	IONIZER SUPPORT BAR (BOTTOM)	1
5	02-0749	IONIZER/CELL FEED THRU INSULATOR ASSEMBLIES	2
	37-0026	INSULATOR ONLY	2
6	37-0028	IONIZER STANDOFF INSULATOR	4
7	03-0559	IONIZER WIRE SPRING	20
8	03-0738	IONIZER WIRE, 10 MIL SST	10
9	30-0387	CELL CONTACT SCREW	1
10	30-0384	FLAT WASHER 1/4'' SST	1
11	36-0012	CELL CONTACT SPRING	1
12	37-0061	CELL TRIANGULAR INSULATOR	8
13	10-0158	WIDE PLATE (GND.)	37
14	10-0157	NARROW PLATE (+/-)	38
15	36-0012	GROUND SPRING, DOOR	1
16	36-0142	SCREW 8-32 x 1/2''	4
17	36-0016	GROUND SPRING, WALL*	1

*NOT SHOWN

11. ORDERING PARTS

11.1 REPLACEMENT PARTS

Common replacement parts are shown on the following pages. For parts not illustrated, first check unit drawings shipped with the unit. To order PARKER parts, contact your local PARKER representative or call/write:

Parker Hannfin
242 Neck Road
Haverhill, MA 01835
1-800-343*4048

For prompt service, please specify:

1. Unit Model No. (nameplate)
2. Unit Serial No. (nameplate)
3. Part No. or Part Description (see Illustrated Parts)

11.2 RETURNING PARTS

When returning parts directly to PARKER, call PARKER for a return material authorization number (RMA). This number should be on the package being returned.

This assures prompt handling and service. Replacement parts are listed in Figure 18.

11.3 FREIGHT COST

Freight cost on returned parts must be prepaid by the sender. Freight cost on parts shipped from PARKER is prepaid by PARKER and added to the cost of the parts.

12. APPENDIX

12.1 WIRING DIAGRAMS

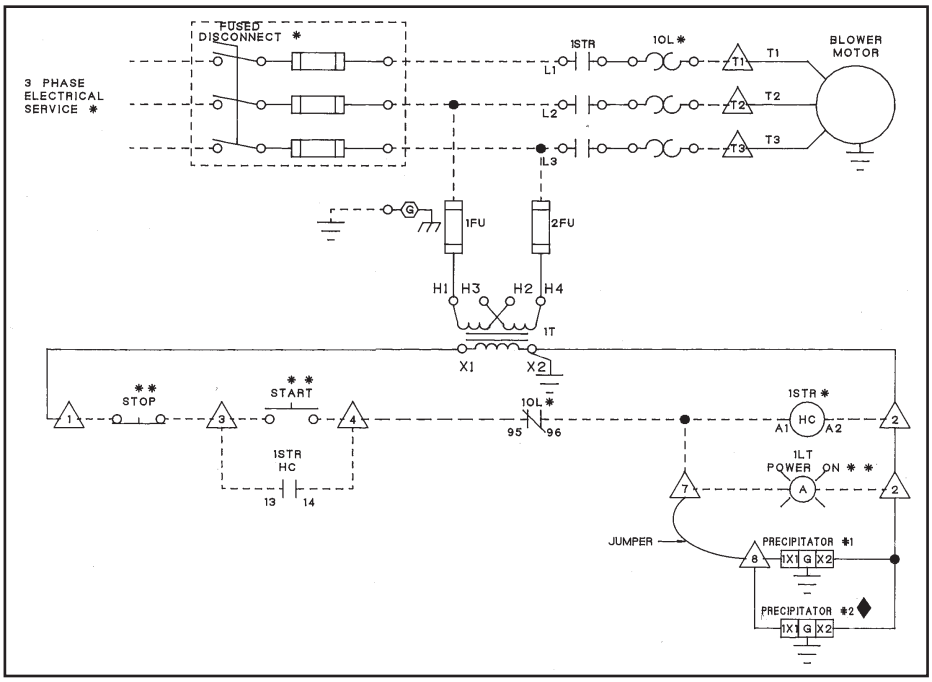

Wiring Diagram
SGN Standard Units

NOTE: CUSTOMER TO PROVIDE STARTER WITH PUSH BUTTON STATION (BETWEEN TERMINALS 1 AND 7).

LEGEND:

– – –	WIRING BY CUSTOMER
H	SUPPLIED BY CUSTOMER
H H	OPTIONAL START/STOP STATION
△	TERMINAL IN ELECTRICAL BOX
u	SGN 12T UNITS ONLY

12.1 WIRING DIAGRAMS

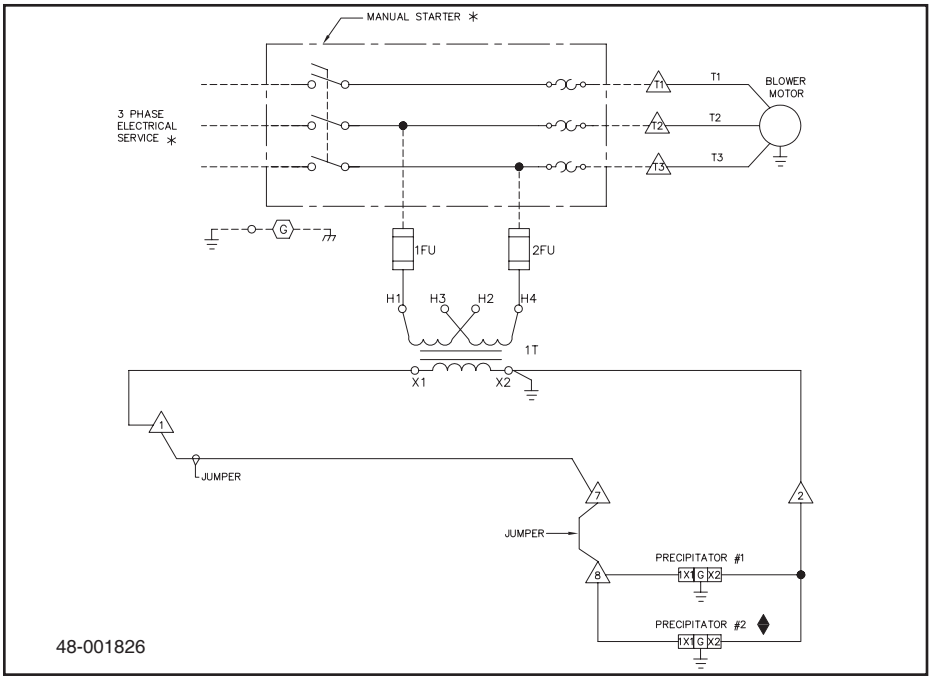

Wiring Diagram (Manual Starter)

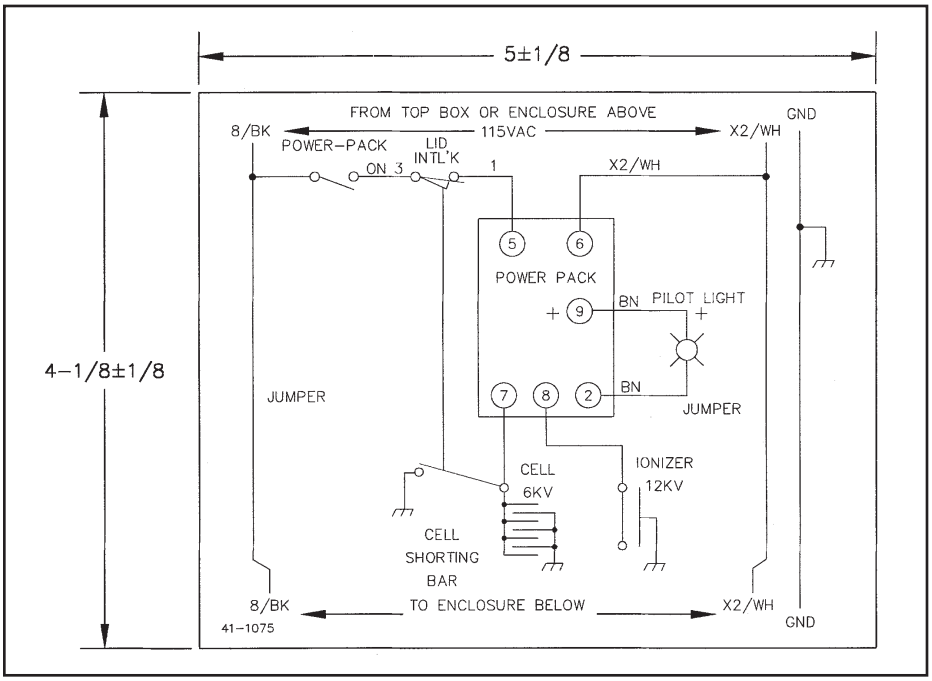

Wiring Diagram SGN Power Pack Enclosure

NOTE: CUSTOMER TO PROVIDE STARTER WITH PUSH BUTTON STATION (BETWEEN TERMINALS ⚠1 AND ⚠1).

LEGEND:

– – –	WIRING BY CUSTOMER
H	SUPPLIED BY CUSTOMER
H H	OPTIONAL START/STOP STATION
⚠	TERMINAL IN ELECTRICAL BOX
u	SGN 12T UNITS ONLY

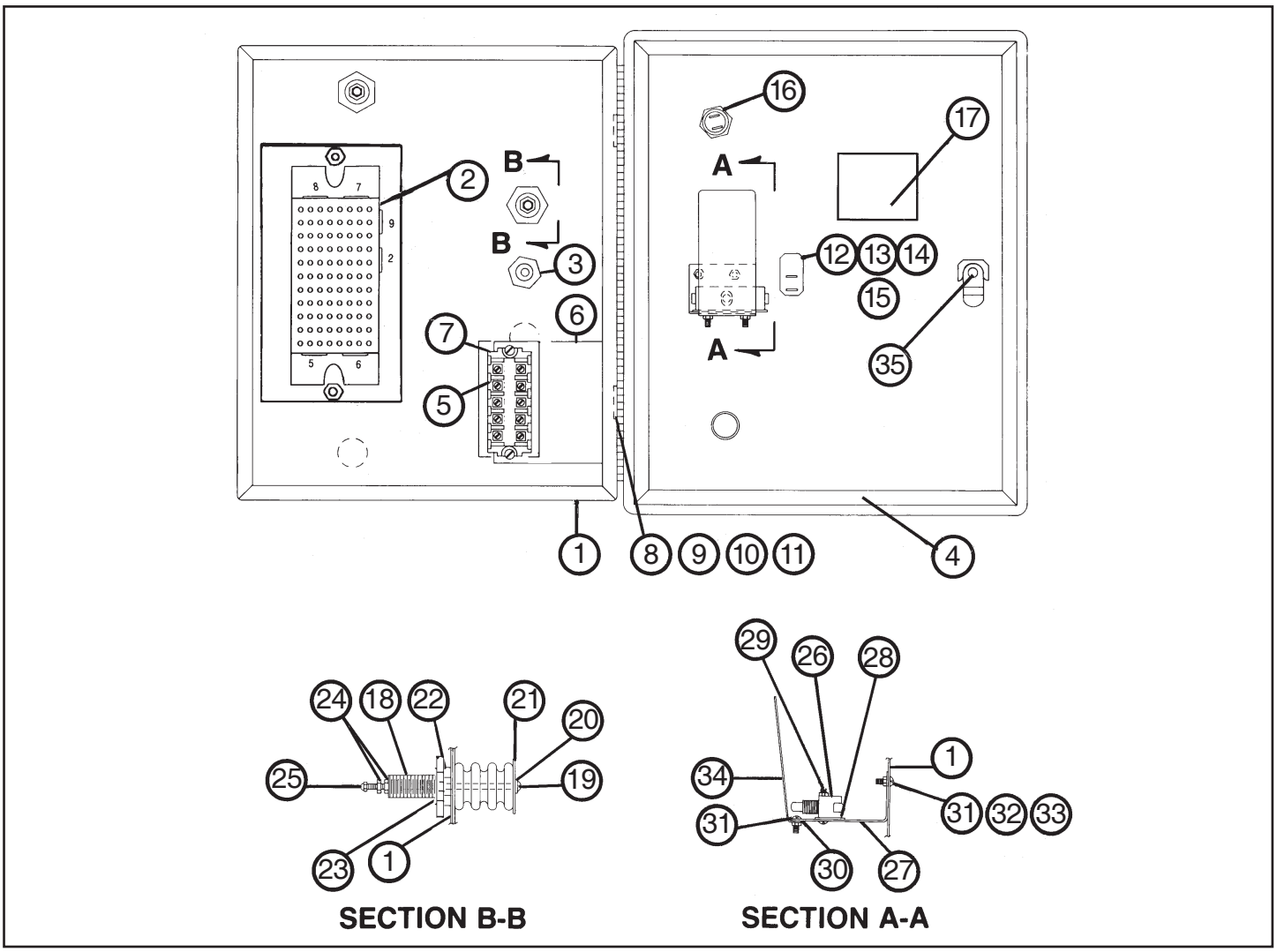

12.2 POWER PACK ENCLOSURE ILLUSTRATION

12.3 POWER PACK ENCLOSURE ASSEMBLY PARTS LIST

ITEM NO.	PART NO.	DESCRIPTION	QUANTITY REQUIRED
1	20-1396	Power Pack Enclosure	1
2*	21-1216D	Power Pack	1
3	02-1651	Shorting Out Assembly	1
4	42-10063-0001	Gasket For Lid Cover	1
5	20-2835	Terminal Block	1
6	10-11034-0002	Terminal Bracket	1
7	41-2435-5	Terminal Label	1
8	30-0121	Screw RD HD ½”	1
9	30-0065	Flat Washer #10	1
10	30-0040	Lock Washer #10	1
11	30-0003	Hex Nut 10 x 32	1
12	20-0326	Toggle Switch SPST	1
13	30-0045	Lock Washer ½”	1
14	20-0002	Label “Off/On”	1
15	20-0035	Hex Cap Switch Seal	1
16	02-10561-G	LED Light	1
17	41-2535	Wiring Diagram Label	1
18	02-0749	Door Feed Through Insulator Assembly	2
37-0026	Door Feed Through Insulator		2
19	30-0398	Round Head Screw, #10-32 x 4” SST	2
20	30-0412	Lock Washer, #10 EXT. Tooth, SST	2
21	30-0367	Fender Washer, ¼” x 1 1/2”, SST	2
22	35-0013	Spacer	2
23	30-0310	Pal Nut, 5/8”-16	2
24	30-0003	Hex Nut, #10-32 x 1”	4
25	30-0249	Hex Cap Nut, #10-32 SST	2
26	20-1239	Interlock Switch, SPST (N.O.)	1
27**	10-1077	Mounting Switch Bracket L/R	1
10-1076	Mounting Switch Bracket R/L		1
28	37-0031	Switch Insulator	1
29	30-0016	Screw 6-32 x 1”	2
30	30-0345	Nut Plate	2
31	30-0118	Screw 6-32 x ½”	4
32	30-0038	Lock Washer #6	2
33	30-0001	Hex Nut 6-32	2
34	10-0961	Interlock Switch Arm Ground Bar	1
35	39-10008-0006	Hex Latch	1

* Standard power pack part number. System could have a special power pack, refer to part number on the power pack (21-XXXX) before ordering replacements.

** L/R left to right airflow unit, R/L right to left airflow unit, as viewing from the component door side.

Product Warranty –
SMOG-HOG® and DUST-HOG® Pollution Control Systems

1. Subject to the terms and conditions hereof, Parker-Hannifin Corporation (PARKER) warrants that major structural components on MCB, PNP, SDC, SFC, and SHM series will be free from defects in materials and workmanship for ten (10) years from the date of shipment from Parker. Subject to the terms and conditions hereof, warrants to the original Buyer of any Parker product (PRODUCT) installed and used as recommended by PARKER in normal service, that if the PRODUCT fails or is materially defective within twenty-four (24) months from date of installation or thirty (30) months from the date of shipment (whichever is earlier), of such PRODUCT, then PARKER, at PARKER'S sole option, will replace the PRODUCT with the same or equivalent PRODUCT, repair the PRODUCT or refund the original purchase price for the PRODUCT. Such replacement, repair of payment by PARKER shall be in complete satisfaction of any and all liability of PARKER and its agents with respect to such PRODUCT. Excluded from any Parker warranty are hose, electrical motors or consumable products such as flexible hose, belts, filter cartridges, filter media, ESP cells, electrical components, gasketing, or any component defined by PARKER as a consumable item.

2. Parker IGFG's warranty policy covers defects that are due to manufacturing quality. Equipment must be installed, commissioned and maintained in accordance with Parker IGFG recommendations as documented in the specific user manual related to your dust or wet collector product. This warranty does not cover defects due to poor environmental conditions, improper installation, or wear and tear items. This warranty shall be void in case of:

a) Any buyer's modifications not explicitly approved by Parker IGFG Division,
b) Misuse or failure in maintenance - not in accordance with Parker's product recommendations,
c) Use of unauthorized or non-genuine Parker replacement parts,
d) Damage caused by corrosion, abrasion, abnormal use or misuse, misapplication, or normal wear and tear,
e) Equipment not properly installed, operated and maintained under normal conditions and recommended applications.

As Buyers exclusive remedy for any defects in the equipment, Parker will exchange or repair any defective parts during the warranty period, provided such parts are returned, prepaid, to Parker factory. The obligation of Parker is limited to furnishing replacement parts EXW Parker factory or making repairs at Parker factory of any parts that are determined, upon inspection by Parker, to be defective. In no event will Parker be responsible for labor or transportation charges for the removal, reshipment or reinstallation of the parts. Replacement parts will be provided via INCOTERMS EXW from Parker's Lancaster NY location. Parker makes no warranty as to goods manufactured or supplied by others.

3. THE FOREGOING IS THE ONLY WARRANTY, GUARANTEE OR REPRESENTATION OF ANY KIND MADE WITH RESPECT TO THE SUBJECT PARKER PRODUCTS. NO IMPLIED WARRANTY, INCLUDING ANY IMPLIED WARRANTY OF NONINFRINGEMENT, DESIGN, MERCHANTABILITY OR FITNESS FOR A PARTICULAR PURPOSE, APPLIES TO THE PRODUCT, AND NO OTHER EXPRESS WARRANTY OR GUARANTY, EXCEPT AS MENTIONED ABOVE, GIVEN BY ANY PERSON, FIRM OR CORPORATION WITH RESPECT TO THE PRODUCT SHALL BIND PARKER. PARKER SHALL NOT BE LIABLE FOR LOSS OF REVENUES OR PROFITS, EXPENSE FOR SUBSTITUTE EQUIPMENT OR SERVICE, STORAGE CHARGES, OR ANY OTHER SPECIAL, INCIDENTAL OR CONSEQUENTIAL DAMAGES CAUSED BY THE USE, MISUSE OR INABILITY TO USE THE PRODUCT REGARDLESS OF THE LEGAL THEORY ON WHICH THE CLAIM IS BASED, AND EVEN IF PARKER HAS BEEN ADVISED OF THE POSSIBILITY OF SUCH DAMAGES. NOR SHALL RECOVERY OF ANY KIND AGAINST PARKER BE GREATER IN AMOUNT THAN THE PURCHASE PRICE OF THE PRODUCT SOLD BY PARKER AND CAUSING THE ALLEGED DAMAGE.
WITHOUT LIMITING THE FOREGOING, YOU ASSUME ALL RISK AND LIABILITY FOR LOSS, DAMAGE OR INJURY TO YOU AND YOUR PROPERTY AND TO OTHERS AND THEIR PROPERTY ARISING OUT OF USE, MISUSE OR INABILITY TO USE THE PRODUCT NOT CAUSED DIRECTLY BY THE NEGLIGENCE OF PARKER. THIS LIMITED WARRANTY IS GIVEN ONLY WITH RESPECT TO A PRODUCT PURCHASED FROM PARKER OR AN AUTHORIZED PARKER DISTRIBUTOR.

4. IN NO EVENT IS PARKER LIABLE FOR ANY SPECIAL, INDIRECT, INCIDENTAL, OR CONSEQUENTIAL DAMAGES ARISING OUT OF, OR AS THE RESULT OF, THE SALE, DELIVERY, NON-DELIVERY, SERVICING, NONCOMPLETION OF SERVICES, USE, LOSS OF USE OF, OR INABILITY TO USE THE PRODUCT OR ANY PART THEREOF, LOSS OF DATA, IDENTITY, PRIVACY, OR CONFIDENTIALITY, OR FOR ANY CHARGES OR EXPENSES OF ANY NATURE INCURRED WITHOUT PARKER'S WRITTEN CONSENT, WETHER BASED IN CONTRACT, TORT OR OTHER LEGAL THEORY. IN NO EVENT SHALL PARKER'S LIABILITY UNDER ANY CLAIM MADE BY BUYER EXCEED THE PURCHASE PRICE PAID FOR THE PRODUCT.

5. Defective PRODUCTS must be documented via PARKER support "Case Number" within thirty (30) days after the date of the alleged failure or defect and within the warranty period by contacting Parker Technical Support via email or phone:

smoghog@parker.com or dusthog@parker.com
800-343-4048, option 2

The claim must specify in reasonable detail:
1) Product Serial Number or Parker Sales Order # and approximate Date of Purchase;
2) Where or from whom the product was originally purchased;
3) Description of problem symptom;
4) Description of troubleshooting effort details;
5) Description of physical location and/or environment details. The Buyer shall cooperate with PARKER in its investigation and provide full information and documentation concerning the PRODUCT and its usage.

Upon receipt of the claim, Parker IGFG will review and determine if the parts replaced need to be returned for quality evaluation and root cause investigation. If a part is required to be returned, Parker IGFG will issue a Return Material Authorization (RMA) to Return via email. Parts should be returned to Parker IGFG, freight collect, within 45 days accompanied by the RMA packing slip placed on the package. If the repaired part does not need to be returned you will be advised to field scrap it and the claim will be processed. Proof of the defect (written description and pictures of the parts units in question) is required.

NOTE: ANY PART NOT RETURNED WITHIN THE REQUIRED 45 DAYS WILL NOT BE REIMBURSED ON THE CLAIM.

On claims that require repaired parts return, the claim will be processed after the part has been evaluated by the Parker IGFG Quality Department for verification of failure mode. The claims will be paid in the form of a credit to the customer's account. Parker reserves the right to withdraw any quotation or proposal or reject any purchase order without liability.

Worldwide Filtration Manufacturing Locations

North America

Compressed Air Treatment

Industrial Gas Filtration and Generation Division
Airtek/Finite/domnick hunter/Zander
Lancaster, NY
716 686 6400
www.parker.com/igfg

Balston
Haverhill, MA
978 858 0505
www.parker.com/balston

Engine Filtration

Racor
Modesto, CA
209 521 7860
www.parker.com/racor

Holly Springs, MS
662 252 2656
www.parker.com/racor

Hydraulic Filtration

Hydraulic & Fuel Filtration
Metamora, OH
419 644 4311
www.parker.com/hydraulicfilter

Laval, QC Canada
450 629 9594
www.parkerfarr.com

Velcon
Colorado Springs, CO
719 531 5855
www.velcon.com

Process Filtration

domnick hunter Process Filtration
SciLog
Oxnard, CA
805 604 3400
www.parker.com/processfiltration

Water Purification

Village Marine, Sea Recovery, Horizon Reverse Osmosis
Carson, CA
310 637 3400
www.parker.com/watermakers

Europe

Compressed Air Treatment

domnick hunter Filtration & Separation
Gateshead, England
+44 (0) 191 402 9000
www.parker.com/dhfns

Parker Gas Separations
Etten-Leur, Netherlands
+31 76 508 5300
www.parker.com/dhfns

Hiross Zander
Essen, Germany
+49 2054 9340
www.parker.com/hzfd

Padova, Italy
+39 049 9712 111
www.parker.com/hzfd

Engine Filtration & Water Purification

Racor
Dewsbury, England
+44 (0) 1924 487 000
www.parker.com/rfde

Racor Research & Development
Stuttgart, Germany
+49 (0)711 7071 290-10

Hydraulic Filtration

Hydraulic Filter
Arnhem, Holland
+31 26 3760376
www.parker.com/hfde

Urjala, Finland
+358 20 753 2500

Condition Monitoring
Parker Kittiwake
West Sussex, England
+44 (0) 1903 731 470
www.kittiwake.com

Process Filtration

domnick hunter Process Filtration
Parker Twin Filter BV
Birtley, England
+44 (0) 191 410 5121
www.parker.com/processfiltration

Asia Pacific

Australia
Castle Hill, Australia
+61 2 9634 7777
www.parker.com/australia

China
Shanghai, China
+86 21 5031 2525
www.parker.com/china

India
Chennai, India
+91 22 4391 0700
www.parker.com/india

Parker Fowler
Bangalore, India
+91 80 2783 6794
www.johnfowlerindia.com

Japan
Tokyo, Japan
+81 45 870 1522
www.parker.com/japan

Korea
Hwaseon-City
+82 31 359 0852
www.parker.com/korea

Singapore
Jurong Town, Singapore
+65 6887 6300
www.parker.com/singapore

Thailand
Bangkok, Thailand
+66 2186 7000
www.parker.com/thailand

Latin America

Parker Comercio Ltda.
Filtration Division
Sao Paulo, Brazil
+55 12 4009 3500
www.parker.com/br

Pan American Division
Miami, FL
305 470 8800
www.parker.com/panam

Africa

Aeroport Kempton Park, South Africa
+27 11 9610700
www.parker.com/africa

© 2020 Parker Hannifin Corporation. Product names are trademarks or registered trademarks of their respective companies. IOM_PKR_SGN Electrostatic Precipitator_122020

Parker Hannifin Corporation
Industrial Gas Filtration and
Generation Division
4087 Walden Avenue
Lancaster, NY 14086
phone 800 343 4048
www.parker.com/igfg